GROUND DRIVE - CASE FLUSHING

MS83 / DTS-0150C / DTS-0155

STRAIGHT THRU

Revision #1
11/20/02
02206
6 RSPST
PRESTON PRODUCE

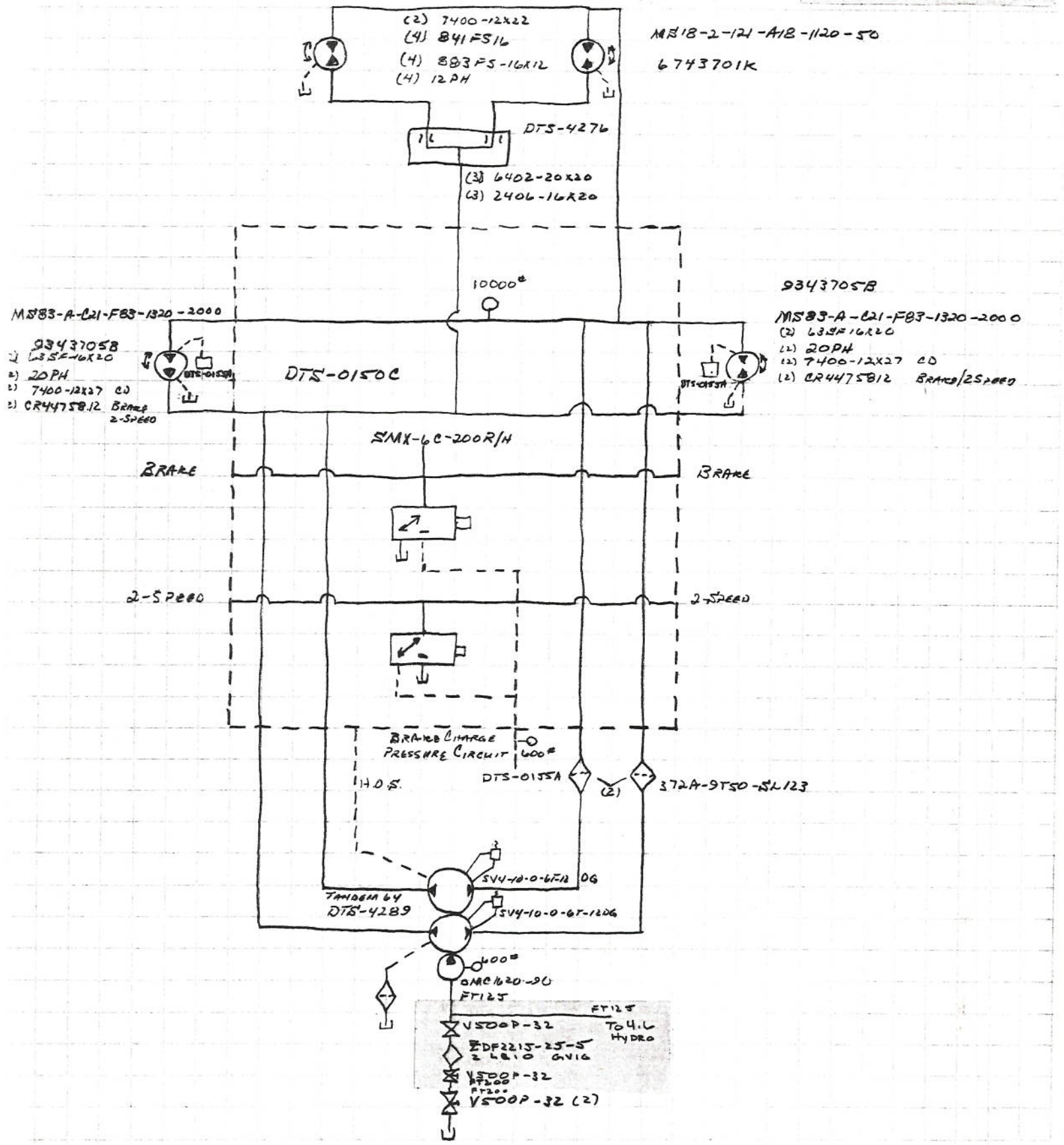

Revision #4

11/20/02

#02206

LRSPST

Preston Produce

Self Propelled Harvester Primary Circuit

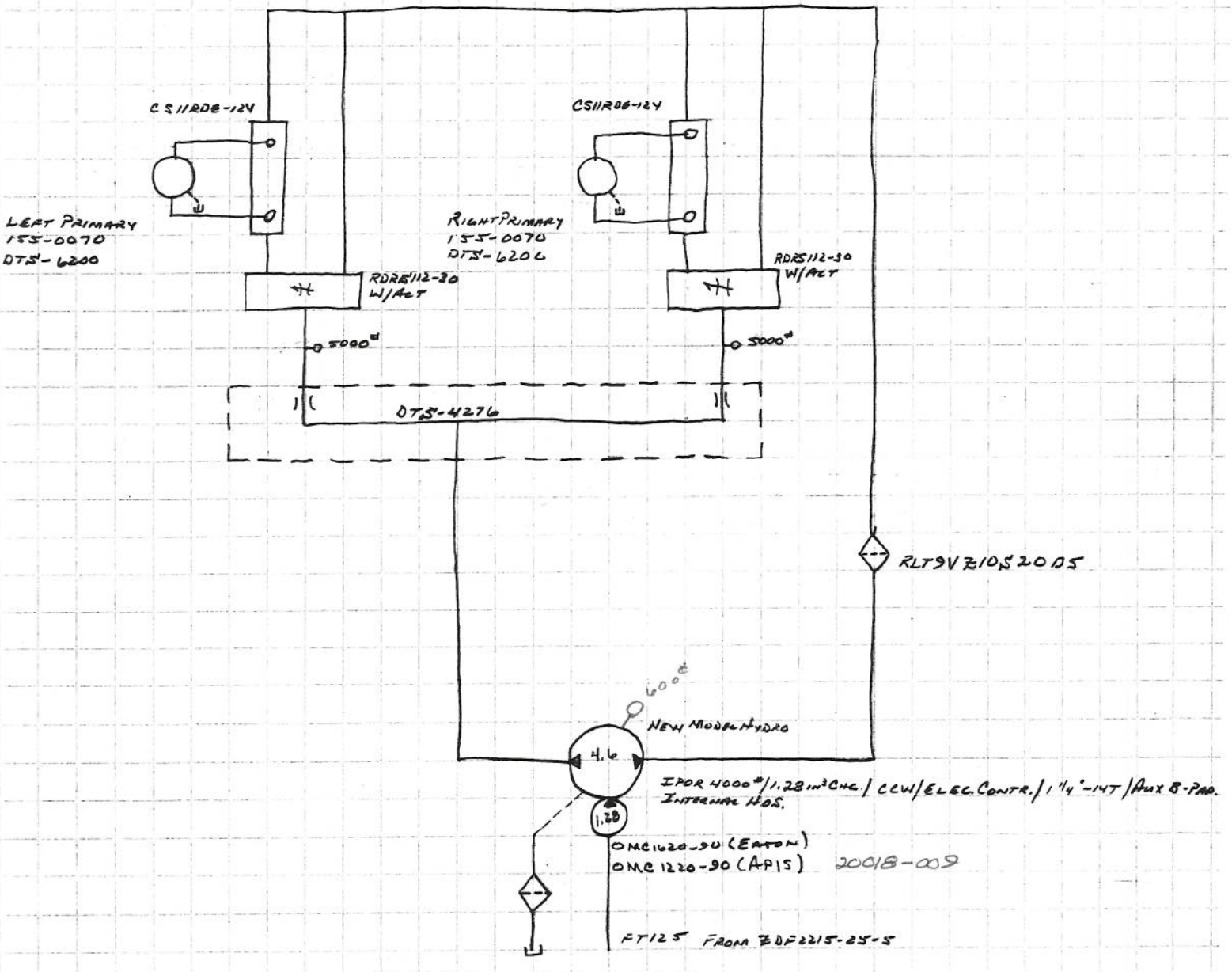

8/10/11
#02206
6RSPHST
Revision: Star Table Addition

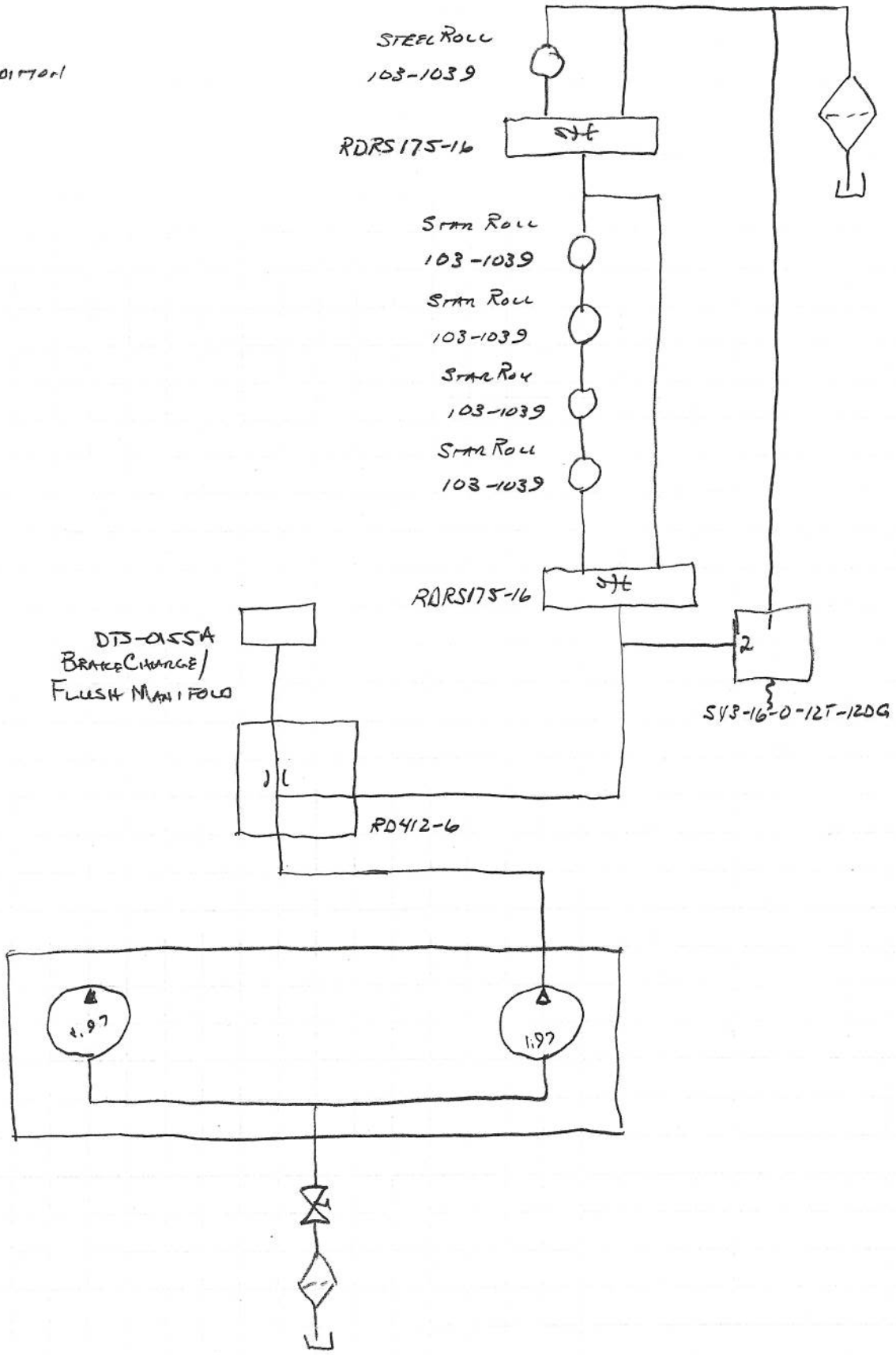

Self Propelled Harvester Straight Thru.

Secondary - Devinar / Poclain Case Flushing

11/20/02 Revision #1
#02206
6RSPST
Preston Produce

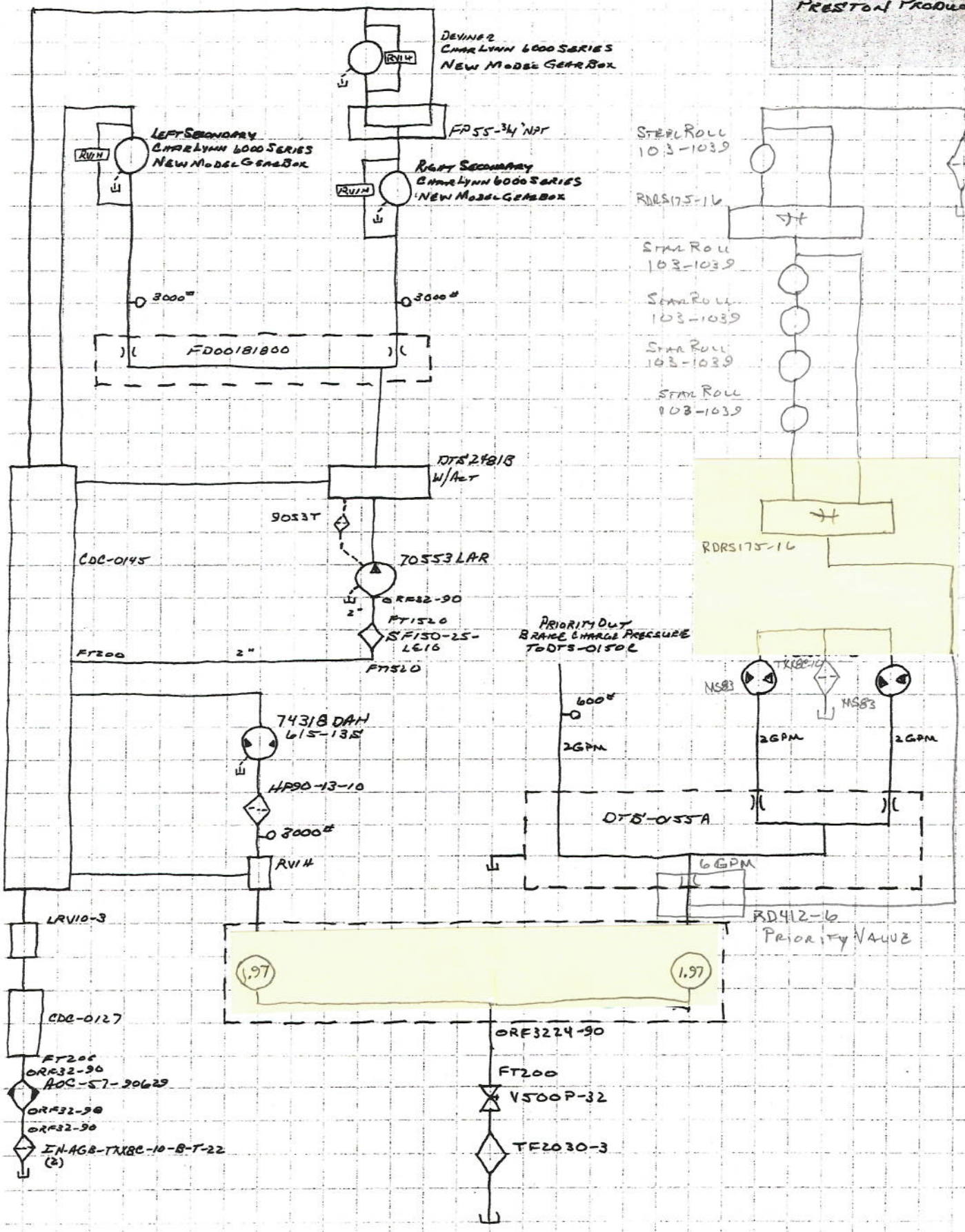

SELF PROPELLED HARVESTER - STRAIGHT THRU

VINE BELT - DIRT CONVEYOR - CROSS

11/20/02
02206
GREPT
PRESTON PRODUCE

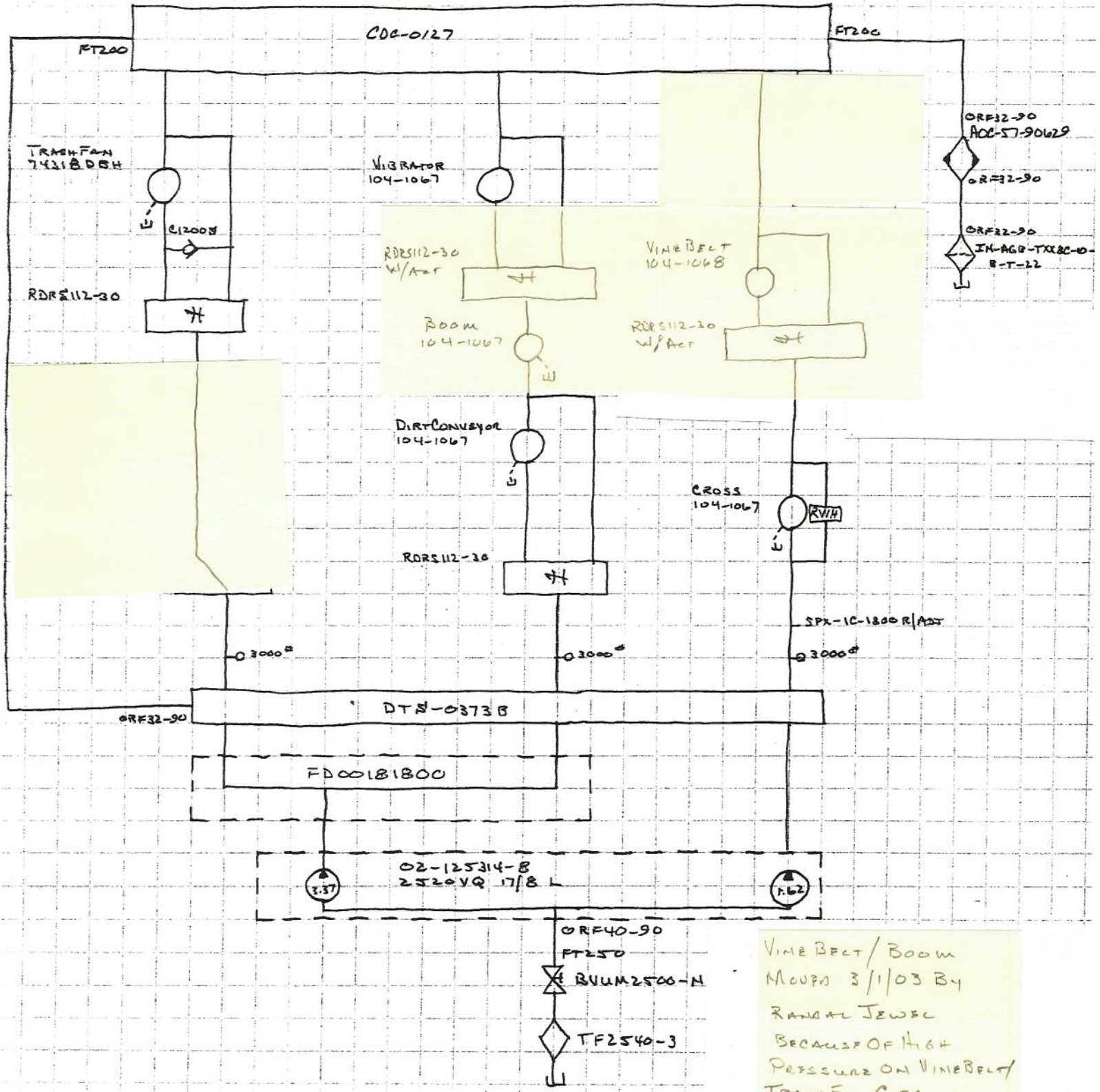

VINE BELT / BOOM MOUNT 3/1/03 BY RANDAL JEWEL BECAUSE OF HIGH PRESSURE ON VINE BELT / TRASH FAN CIRCUIT

SELF PROPELLED HARVESTER - STRAIGHT THRU

VINE BELT - DIRT CONVEYOR - CROSS

REVISION #1

11/20/02

02206

GREPST

PRESTON PRODUCE

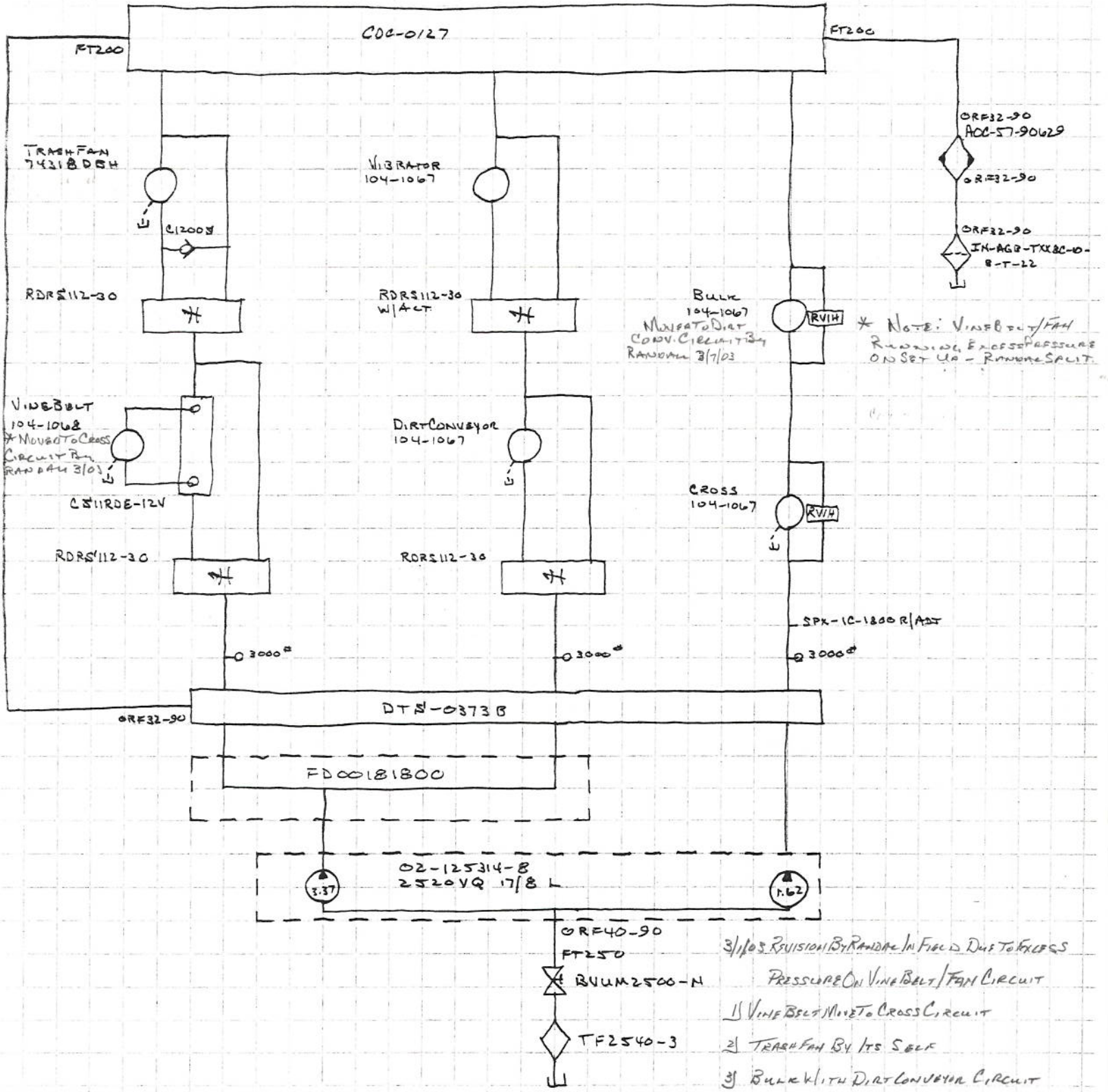

3/1/03 REVISION BY RANDAL IN FIELD DUE TO EXCESS PRESSURE ON VINE BELT/FAN CIRCUIT

1) VINE BELT MOVE TO CROSS CIRCUIT

2) TRASH FAN BY ITS SELF

3) BULK WITH DIRT CONVEYOR CIRCUIT

SELF PROPELLED HARVESTER - STRAIGHT THRU

VINE BELT - DIRT CONVEYOR - CROSS

12/26/02
02206
GREPAT
PRESTON PRODUCE

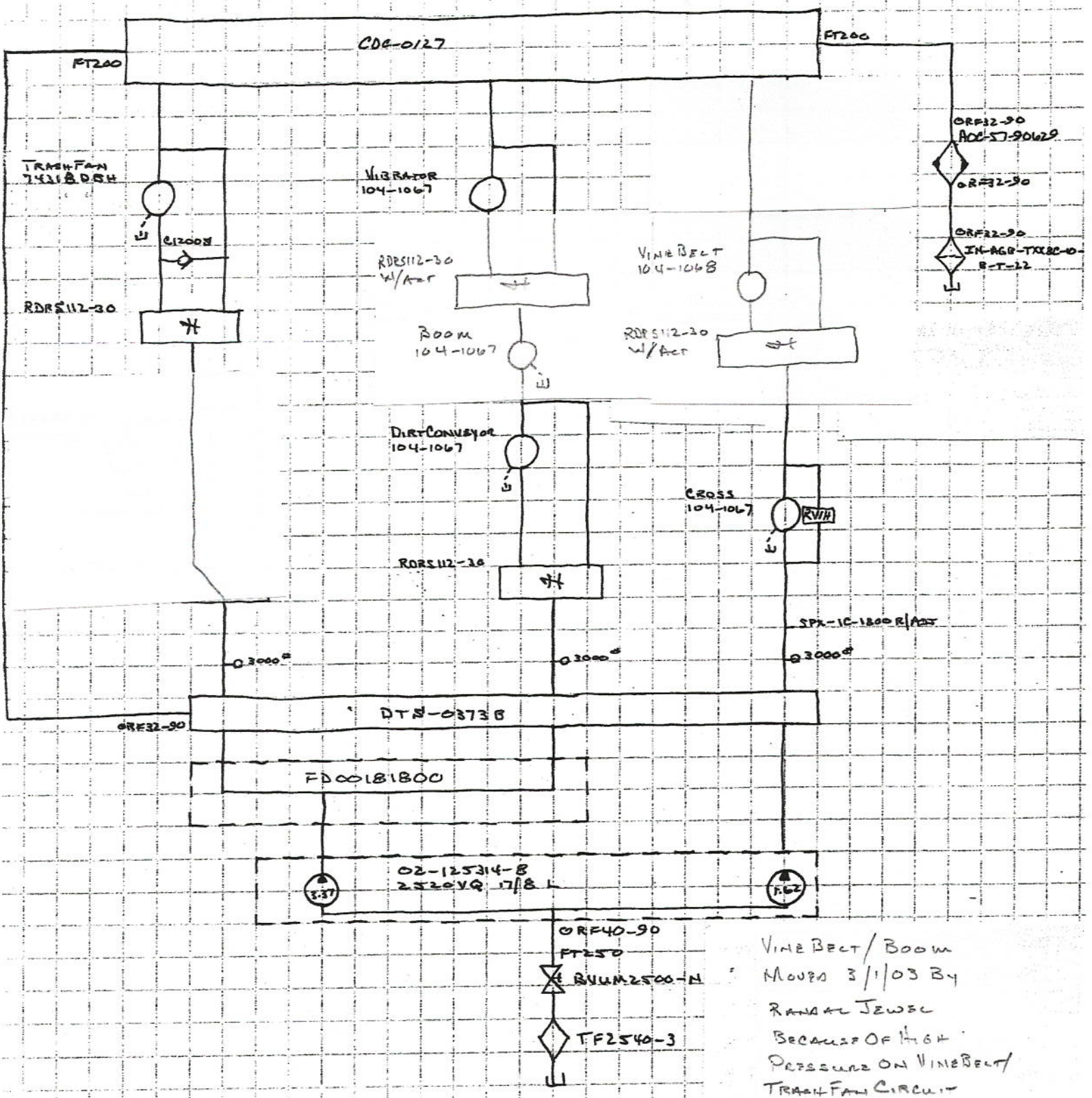

VINE BELT / BOOM MOVED 3/1/03 BY RANDAL JEWEL BECAUSE OF HIGH PRESSURE ON VINE BELT / TRASH FAN CIRCUIT

STEERING / VALVE BANK CIRCUITS

REVISION #1
11/20/02 PRESTON PROD
#02206 UPDATE

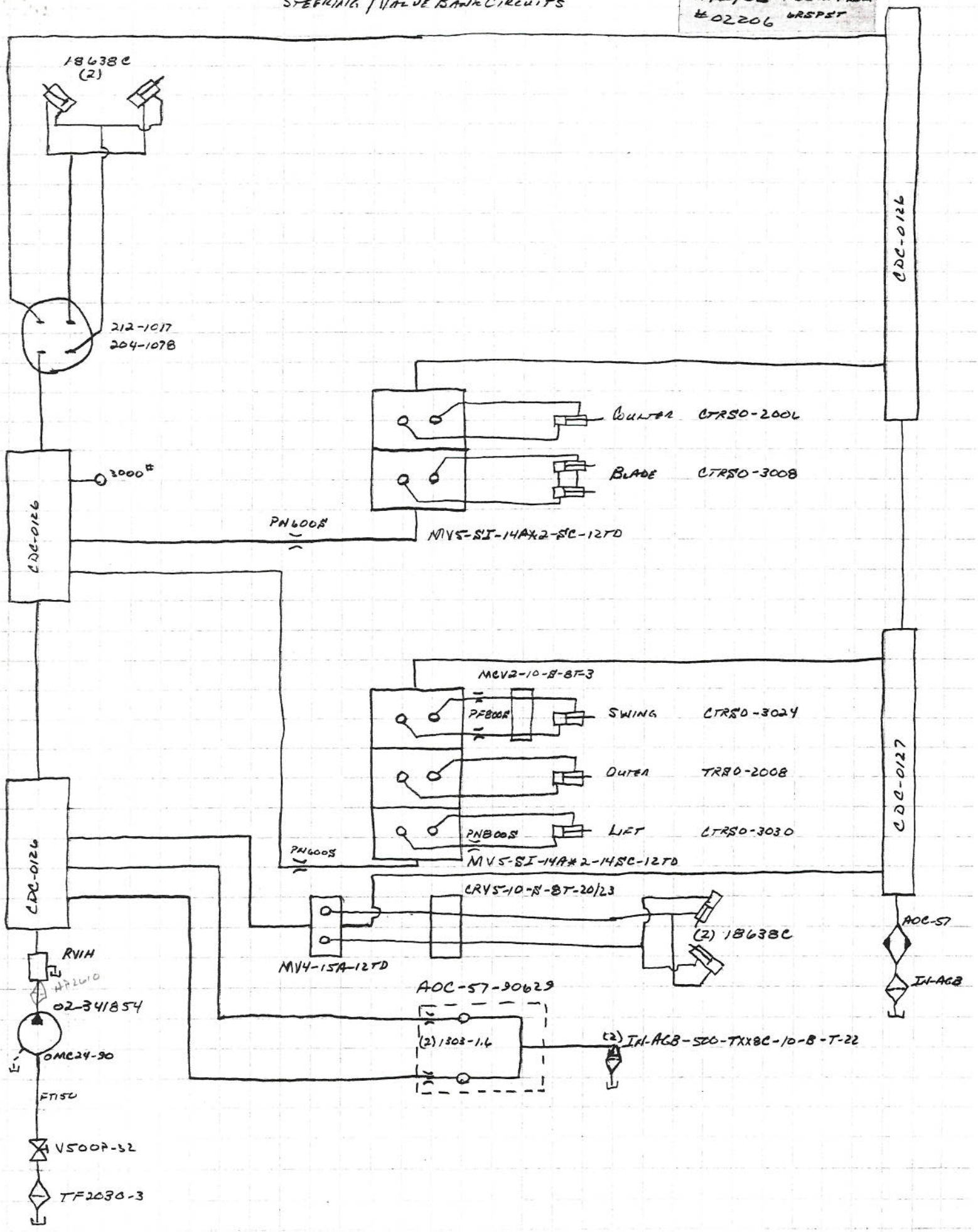

Self Propelled Harvester Straight Thru.

Secondary - Devinar / Poclain Case Flushing

11/20/02 Revision #1
#02206
LRSPST
Preston Produce

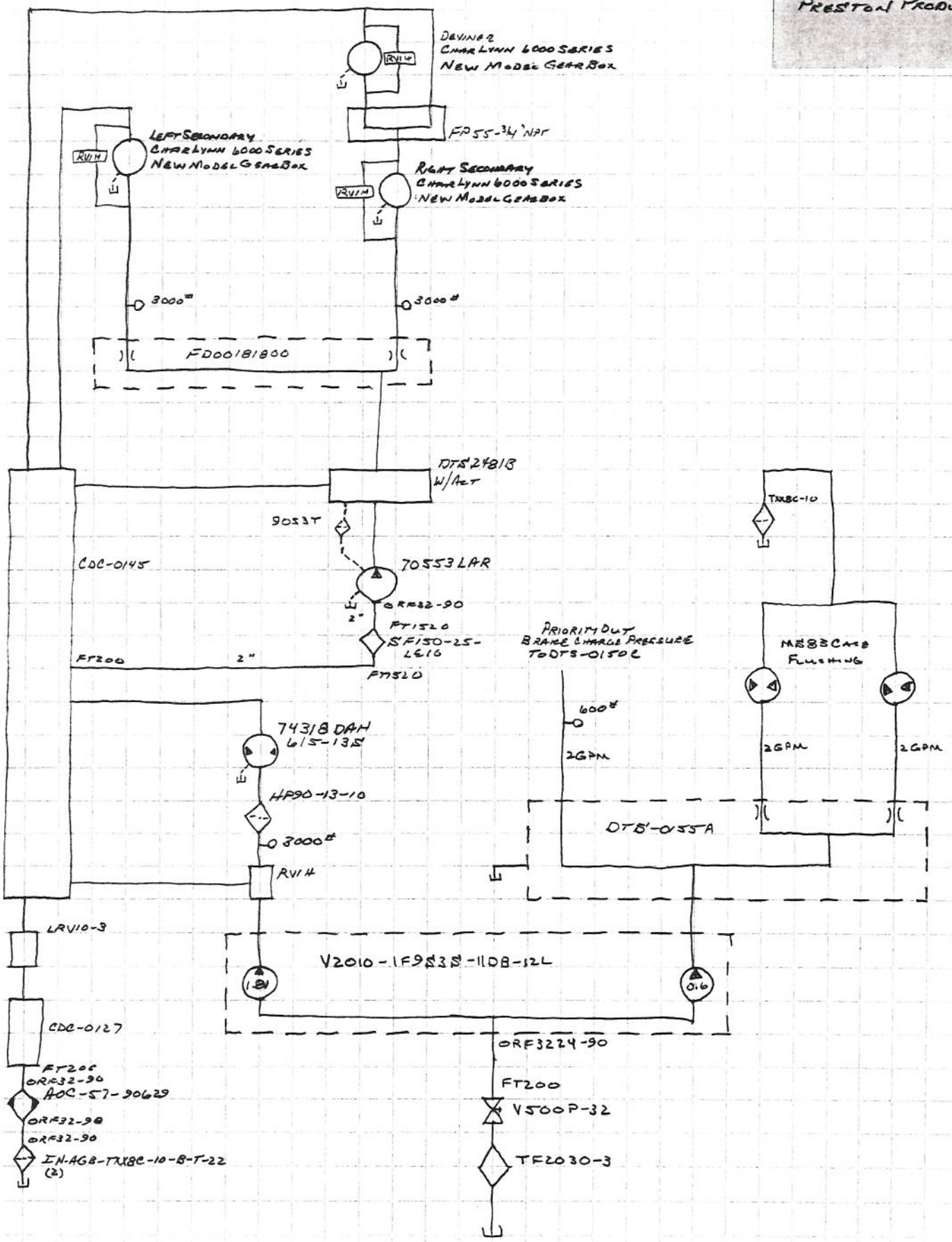

REVISION

12/23/02
#02206
6RSPH-ST
PRESTON PRODUCE

2"	3"	3"	4"
2" CLS NIP	TF2030-3	TF2030-3	TF2540-3
V500P-32	2" CLS NIP	2" CLS NIP	2 1/2" CLS NIP
FT200	V500P-32	V500P-32	BVUM 2500-N
FT200	2"X1 1/2" BUSH	FT200	FT250
V500P-32	FT150	* V2010	* 2520VQ
2" CLS NIP	* PVE21L		
2" 90° STELL			
W43-32PK 2"			
ZDF2215-25-5			
W43-32PK 2"			
2" 90° STELL			
2" CLS NIP			
V500P-32			
2" CLS NIP			
2" TEE ⊢ X O			
X - 2"X1 1/4" BUSH	O - 2" 90° STELL		
FT125	2"X1 1/4" BUSH		
* T64-2.12 IN³	FT125		
	* 4.6 HYDRO		

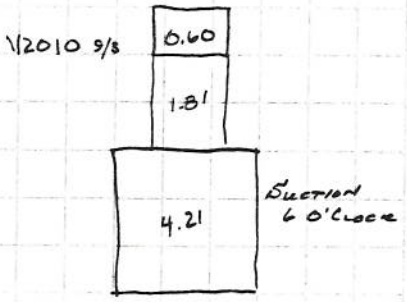

L.R.

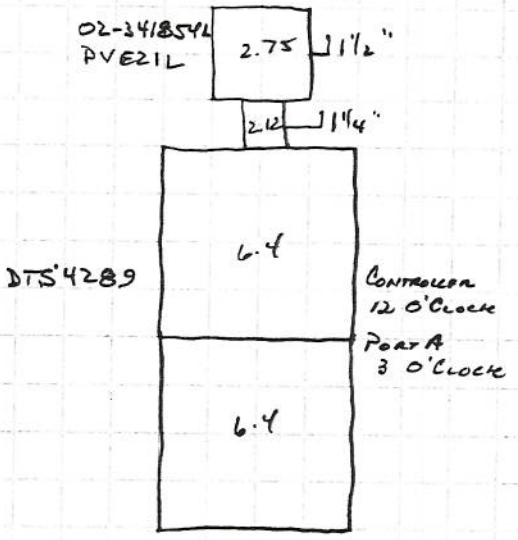

L.L.

KJ5-01 - SAE #1 C/C/C
1216-107 COUPLERS.

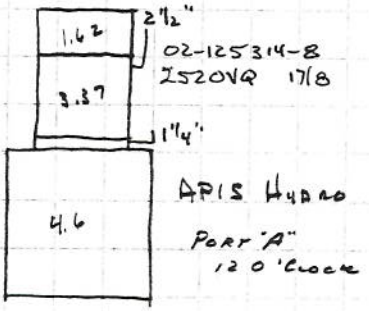

TOP