#06012

Lennard AG

4RPTH W/65" AH

SALES ORDER

Advanced Farm Equipment LLC
5773 Crystal Road
Vestaburg MI 48891
(989) 268-5711

Sales Order Number 026616

Sales Order Date 09/13/06

Page 1

SOLD TO Advanced Farm Equipment
5773 Crystal Road
Vestaburg, MI 48891

SHIP TO Advanced Farm Equipment, LLC
5773 Crystal Rd
Vestaburg MI 48891

P.O. Number		**Terms**	Cash on Del.
Ship Via	N/A	**Salesperson**	Greg Merrihew
Project Code	N/A	**Required**	09/13/2006

ITEM	ORDERED	SHIPPED	BO	DESCRIPTION	PRICE	AMOUNT	TAX
	1.000			Detail 4RPTH65AH		n/a	

QTY	Description

QTY	Description

Finish Request

Date Ordered 026616

Date Needed

Qty.	Parts Number	Description
2	30001-019	FLOW DIVIDER MOUNT
1	30002-019	DTS 0373 MOUNT
8	30009-019	RDRS 112 MOUNT BRKT
3	31015-019	A.H. CLEANER VALVE BRKT
1	30021-019	4 SECTION VALVE BANK BRKT
3	30027-019	RDRS W/ ACTUATOR MOUNT
2	30028-019	REVERSING VALVE MOUNT
1	30034-019	MV4 MOUNT
1	30040-019	MCV2 MOUNT
2	30068-019	SINGLE FILTER BRKT
1	30069-019	DOUBLE FILTER BRKT
1	40001-019	HOODED VALVE BANK ASSY
2		733-5793 2 3/4" CLAMP
6		5/16-18 x 1 1/2 HHCS
VIII IIII V		5/16 LOCK WASHER
VIII		1/4-20 x 2 1/4 HHCS
VIII II		1/4" LOCK WASHER
III V		1/4" FLAT WASHER
*		1/4-20 x 2 1/2 HHCS
~~4~~	~~30001-019~~	~~30001-019~~
II		5/16-18 x 2 1/2 HHCS
VIII		3/8-16 x 3 1/2 SHCS

Finish Request

Date Ordered_____

Date Needed_____

Qty.	Parts Number	Description
VHT		3/8" LOCK WASHER
8		3/8" HI COLLAR LOCK WASHER
12		M10 X 1.5 X 30mm 10.9
12		M10 HI Collar Lock WASHER
1	20027-010	D12897 2 HOLE GEAR BOX DUST
1		DRIVEPLATE
	DTS PART #	2PD06 - 1.18 - ID33 - CCH - CDH - LS
8		3/8-16 x 1 1/4 SHCS
1	30012-019	CRV5 mount
VHT VI		5/16-18 x 3/4
	30031-019	Fuel Pump Bracket
	30024-014	Fuel FILTER Bracket
	~~30023-019~~	~~DTS 2297 BRACKET~~
2		3/8-16 x 3" HHCS
2		CDC 0126 MANIFOLD BRKT
4		1/4-20 x 3" HHCS
1	30001-014	LIGHT BRACKET
1	30019-019	
4		1/2-13 x 1 1/2 HHCS
4		1/2" FLAT WASHER
6		1/2 LOCK WASHER
2		5/8-11 x 1 1/2 HHCS

Finish Request

Date Ordered _____

Date Needed _____

Qty.	Parts Number	Description
2		5/8 LOCK WASHER
2		1/2-13 x 1 1/4 HHCS

026616

HYDTB 06	HYDTB 1/2	HYDTB 5/8	HYDTB 7/8	HYDTB 14H	HYDTB 16	113120	EMT050	EMT075
72	96	34	62	35		19	62	~~36~~
69	94	36	126	37		20	72	~~36~~
70	178	157	78	39		26	30	~~36~~
72	143	155	76	163		[redacted]	24	~~36~~
74	179		179	161		14	28	120
143	74		179	159		22	25	120
58	72		179			46	34	120
50	77		143			[redacted]	30	96
	98		73			27	46	19
	96		75			26	35	24
			184			16	70	22
			181			30	16	69
			79			81	45"	36
			48			40	42	30
			44			30	75	31
			104				12	12
			102				97	19
			100				13	54
							29	54
							27	15
							23	120
							32	120
							72	120
							22	
							17	
							60"	
							31	
							40	
							20	
							26	
							48	
							22	
							36	
							51	
							30	
							26	
							12	
							10	
							16	

Machine # 026616

Bin #	Item Id	Description	
1	100250	2 1/2" Steel Line Clamp	
2	100225	2 1/4" Steel Line Clamp	
2	100200	2" Steel Line Clamp	
3	100150	1 1/2" Steel Line Clamp	
4	100125	1 1/4" Steel Line Clamp	
B-16	100100	1" Steel Line Clamp	
B-1	100087	7/8" Steel Line Clamp	XXXXXXX
B-2	100062	5/8" Steel Line Clamp	XXX
B-3	100050	1/2" Steel Line Clamp	XX
B-4	100037	3/8" Steel Line Clamp	XXXX
B-14	BA19-16	1" Replacement Sleeve	
B-14	BAX3100 16	1" NPT x 1" Tube Tee	
B-14	BAX3200 16	1" Tube Tee	
B-13	ABAX1000-16	1" JIC x 1" Tube	
B-13	BAX1200 16	1" Tube Union	
B-5	ABAX1000-14-12	3/4" JIC x 7/8" Tube	XXX ~~IIII~~ X ~~IIII~~
B-5	BA19-14	7/8" Replacement Sleeve	
B-5	BAX1100 14	3/4" NPT Female x 7/8" Tube	
B-5	BAX1200 14	7/8" Tube Union	
B-5	BAX3100 14	3/4" NPT x 7/8" Tube Tee	
B-5	BAX3200 14	7/8" Tube Tee	
B-6	ABAX1000-10	5/8" JIC x 5/8" Tube	~~IIII~~ ~~IIII~~ ~~IIII~~
B-6	BA19-10	5/8" Replacement Sleeve	
B-6	BAX1100 10	1/2" NPT Female x 5/8" Tube	
B-6	BAX1200 10	5/8" Tube Union	
B-6	BAX3100 10	1/2" NPT x 5/8" Tube Tee	
B-7	BA19-08	1/2" Replacement Sleeve	
B-7	BAX1100 08	1/2" NPT Female x 5/8" Tube	
B-7	BAX1200 08	1/2" Tube Union	
B-7	BAX3100 08	1/2" NPT x 1/2" Tube Tee	I
B-7	BAX3200 08	1/2" Tube Tee	
B-8	BA19-06	3/8" Replacement Sleeve	
B-8	BAX1100 06	3/8" NPT Female x 3/8" Tube	
B-8	BAX1200 06	3/8" Tube Union	
B-8	BAX3100 06	3/8" NPT x 3/8" Tube Tee	
B-7	ABAX1000 08	1/2"JIC x1/2" TUBE	~~IIII~~ ~~IIII~~ ~~IIII~~ III
B-11	ABAX1000 14-12		
	ABAX 1000-06	3/8 JIC x 3/8 TUBE	~~IIII~~ ~~IIII~~ ~~IIII~~ ~~IIII~~

A.F.E. Manufacturing Order Form

Customer Name: AFE
Address:
Phone Number:
Fax Number:

	Standard	Option					
Engine:							
M11-350HP Cummins							
N14-450HP Cummins							
470HP John Deere							
450HP CAT							
Cummins 250							
Rear Tires:							
23.5 x 26							
26.5 x 26							
28L x 26							
6600-43 x 25							
850/45 30.5 Trelleborg	X						
Front Tires:							
17.5 x 24							
1400-24 x 12							
4800-25 x 30							
Row Spacing:							
34" w/30" Bed							
34" w/32" Bed	X						
36" w/33" Bed							
36" w/34" Bed							
Rows:							
3							
4	X						
6							
8							
Primary Bed:							
Full Width-Common Lift	X						
Split w/ Center Coulter							
Full Width, side to side w/cylinder lift							
Primary Bed:							
Single Width	X						
Flex LockWood Style							
Double Width							
Primary Drives:							
Top Drive	X						
Revering Drive							
Chain & Sprocket							
Gear Box	X						
Direct Drive Motor							
VIS Motors							
	Standard	Option					
Secondary:			Wide	Frame	WIS		
Regular Length							

For Office use Only:

Description:

Serial #:

Build #:

A.F.E. Manufacturing Order Form

Customer Name:_____
Address:_____
Phone Number:_____
Fax Number:_____

18" Extended		
Second Secondary		
[redacted]" Extended	X	Long End To Fit Star Table
Secondary Chain:		
Full Width	X	wide frame W.S. frame
Single Width		
Secondary Drive:		
Chain & Sprocket		
Gear Box	X	
Deviner:		
125mm - 5"		
150mm - 6"	X	
150mm - 7"		
200mm - 8"		
Deviner Drive:		
Chain & Sprocket		
Gear Box	X	
Primary Reversing Valves - 2 needed:	X	
Secondary & Deviner		
Star Table:		
Non Adjustable		
Adjustable		
Full Width after Secondaries		
4 Row		
6 Row		
Cross:		
35"		
40"		
48"	X	Startable on End 7 Roll start with 12PT 6PT 12,6,12,6,12,6,12 PT w/Dist.
Split Cross:		
2-24"		
AirHead:		
40"		
50"		
65"	X	Right Hand Discharge
	Standard	Option
Bell Cleaner:	X	
Stone Conveyor:		
Hook Chain		
Belted Chain		

A.F.E. Manufacturing Order Form

Customer Name:_____
Address:_____
Phone Number:_____
Fax Number:_____

Solid Floor							
Vine Belt:							
40"							
50"							
65"	X	with Distribution opposit of AirHead machine					
12'							
18'							
Sort Table:							
30"							
35"	X						
40"							
BulkLoader:							
30"							
35"	X						
40"							
Vibrator:							
Rotating Primary	X						
Rotating Secondary							
Rocking Shaker							
Rear Steering:							
Non Steerable							
37 Degree Steerable	X						
Front Wheel Motors:							
MS18							
MS18 plus 20							
Rear Wheel Motors:							
MS35							
MS50							
MS83							
MS 18+20	X						
Ground Drive:							
2 Wheel	X						
4 Wheel							
Tandem 248 Primary Pump							
	Standard	*Option*					
Triple 248 Primary & Secondary							
Tandem Pumps to drive AirHead:							
M-Table:							
Fan for M-Table:							

A.F.E. Manufacturing Order Form

Customer Name:_____
Address:_____
Phone Number:_____
Fax Number:_____

Water Tanks:							
Coil Beds:							
8							
16							
24							
Bin Storage w/50-70 Bag Automatic Fill Conveyor							
Air Compressor:							
Front Step & Railings:							
Additional Mirrors:							
Fan Read-Out in Cab:							
Reference numbers on controllers							
Additional Lights: (9 standard)							
Additional Tool Box:							
Strobe Lights (1 standard)	X	1 on Back					
Additional Flow Controls:							
Chain:							
Location	Qty	Rod Size	Width	MM	LPR	Pattern	Covering
Primary	4	3/4	32	45		20 1st	Plain
Secandary	2	7/16	68"	45		ST	SRT
Diriner	2	5/8	68"	150		ST	SRT
Cross	1	7/16	48	45		ST	SRT
Lower side	1	7/16	48	45		ST	SRT
Lower Air Head	1	7/16	65	45		ST	SRT
Top Air Head	1	7/16	65	45		ST	SRT
Top side	1	7/16	65	45		ST	SRT
Soft	1	7/16	35	45		ST	SRT
Bulk	1	7/16	35	45		ST	SRT
Location	Qty	Rod Size	Width	MM	LPR	Pattern	Covering

Advanced Farm Equipment Representative: Date:

A.F.E. Manufacturing Order Form

Customer Name:_____
Address:_____
Phone Number:_____
Fax Number:_____

Customer Approval/Acceptance: Date:

Additional Comments:

Sec will Be Ex Long so Small stare Table may Be Added
Engine Built on Slide with oil Tank oil Cooler

4RPTH W/65" A.H. 1/23/06

Air Hose	- 6.4	6922 - 184 20052-009 DTS
Left Primary	3.0	
Right Primary		78461 - LAW-07 20028-009 DTS
Secondary	35VQTBS F.D.	
Devinner Vibrator		
Cross		35VQTBT
Cross Distributor Stars.	35VQTBS F.D.	02-125554-5 20029-009 DTS
Side To A.H.		
Side To A.H. Distributor Stars	2520 F.D.	
A.H. Feed.		
A.H. Discharge		2520VQ
A.H. Discharge Dist. Stars.	2520 FD.	
Side To Vine Belt		02-125314-8 20008-009 DTS
Vine Belt		
Vine Belt Distributor Stars.	2520	
Front Cross		
Boom.		

DTS-4371 A

DTS-0373 2017-10020

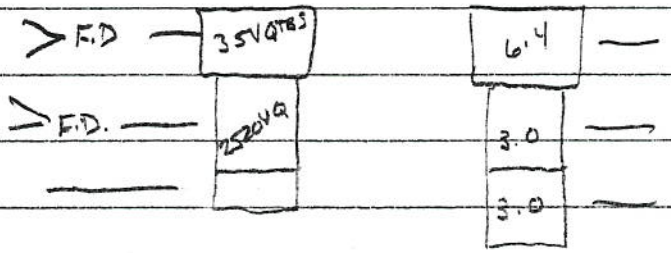

774

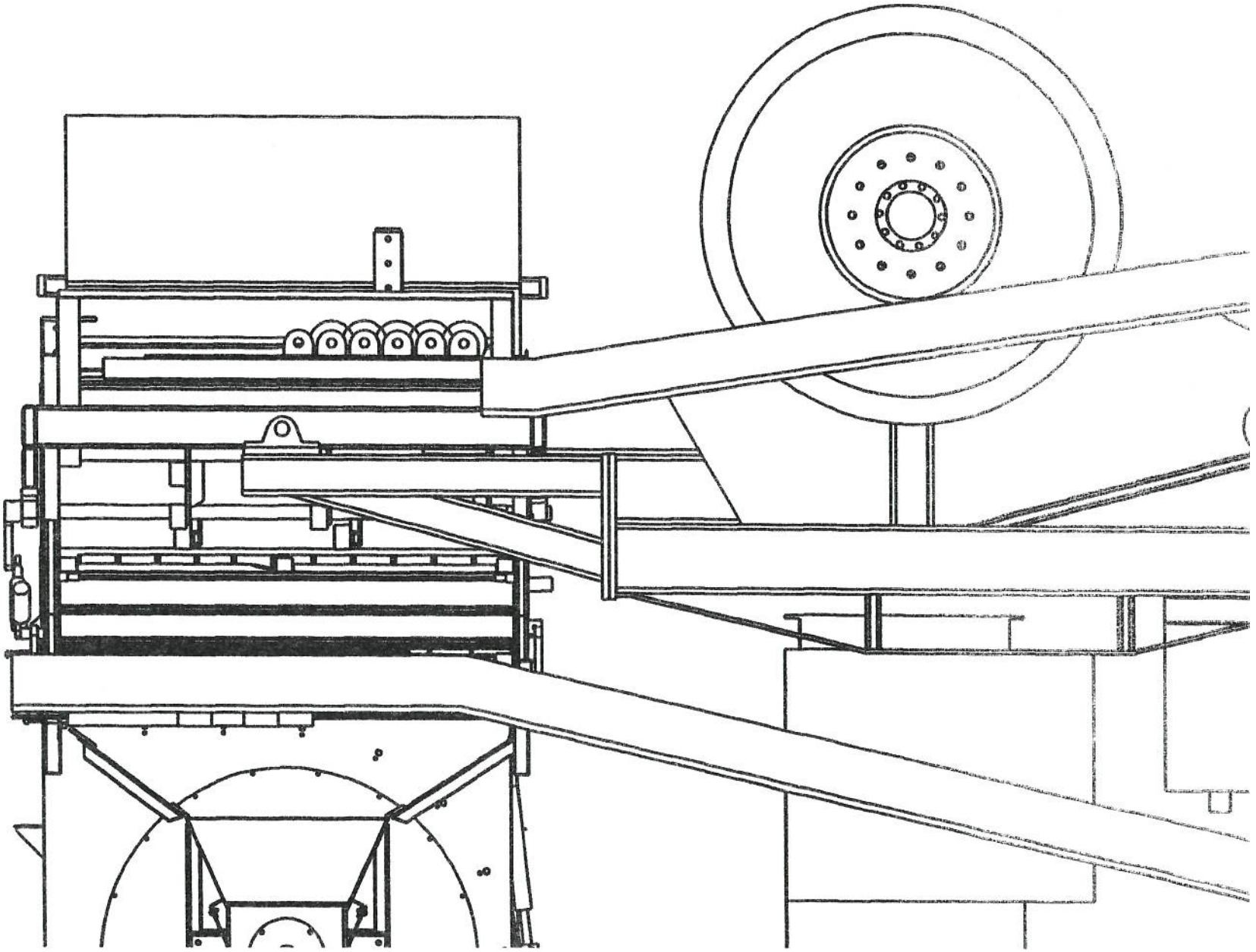

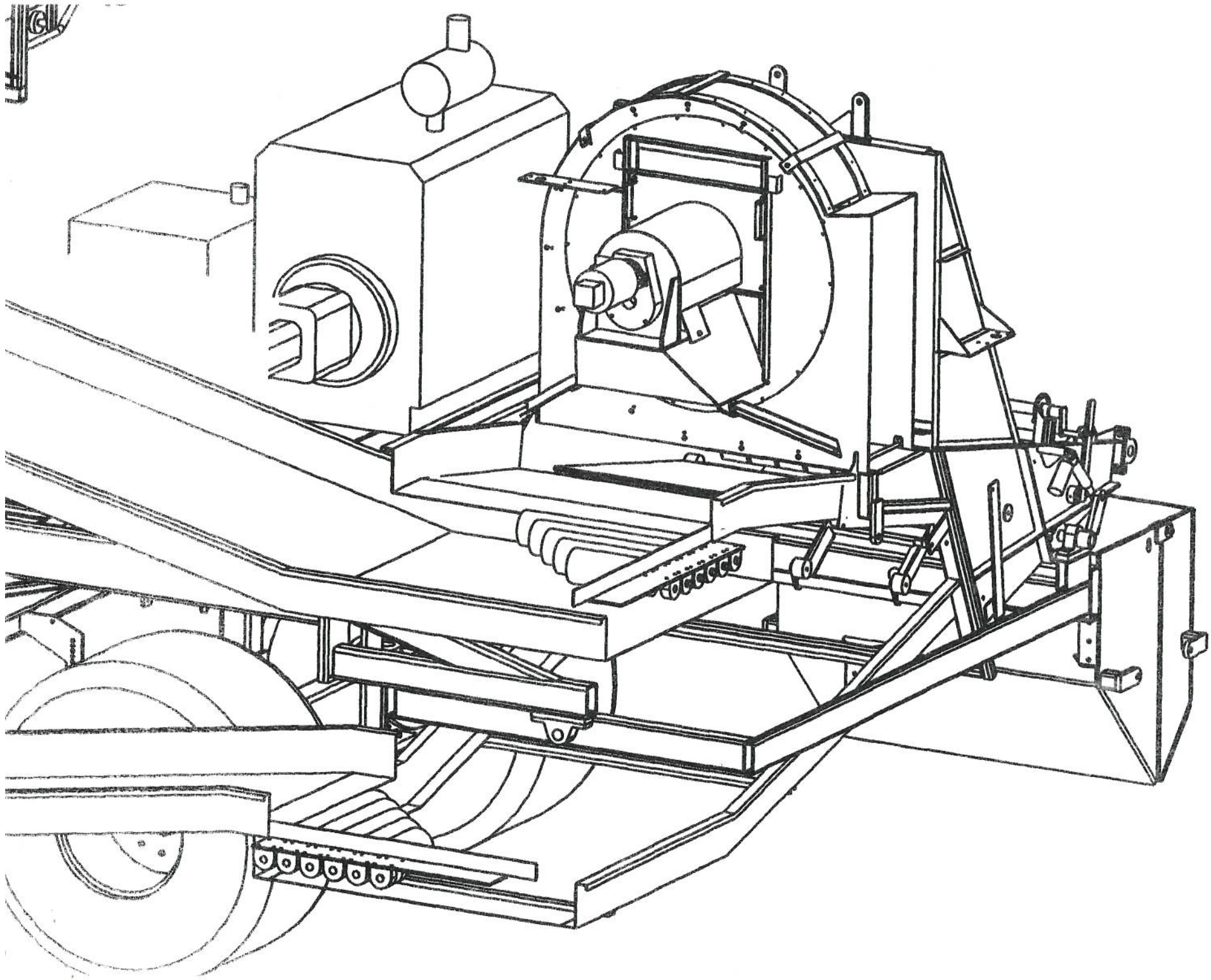

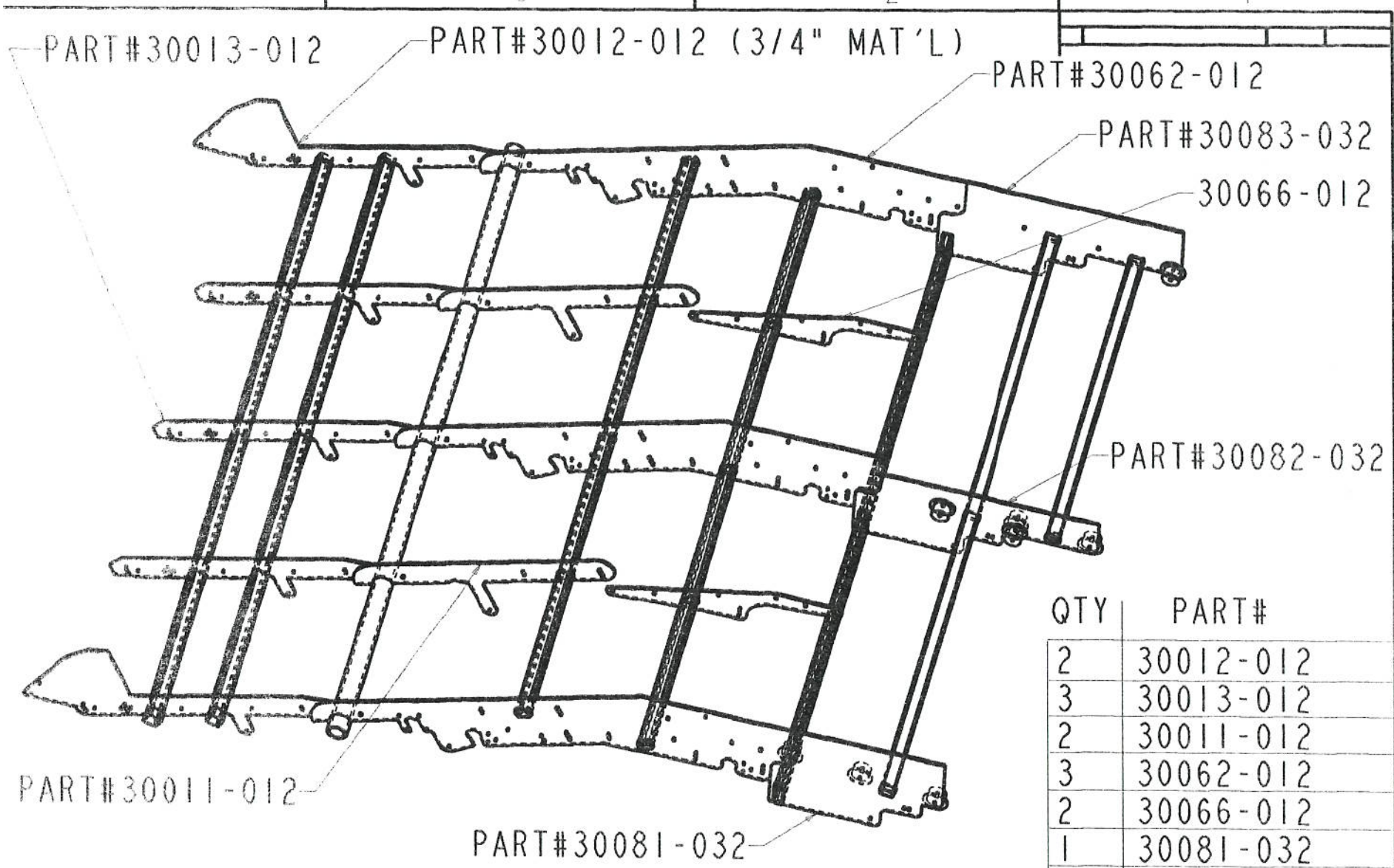

QTY	PART#
2	30012-012
3	30013-012
2	30011-012
3	30062-012
2	30066-012
1	30081-032
1	30082-032
1	30083-032

4 ROW PT DIGGERBED
SINGLE WIDTH PRIMARY
4-ROW 65" AIR-HEAD PT HARVESTER
WITH ELIS TABLE BY-PASS IN SEC.

AFE

ADVANCED FARM EQUIPMENT

BJ

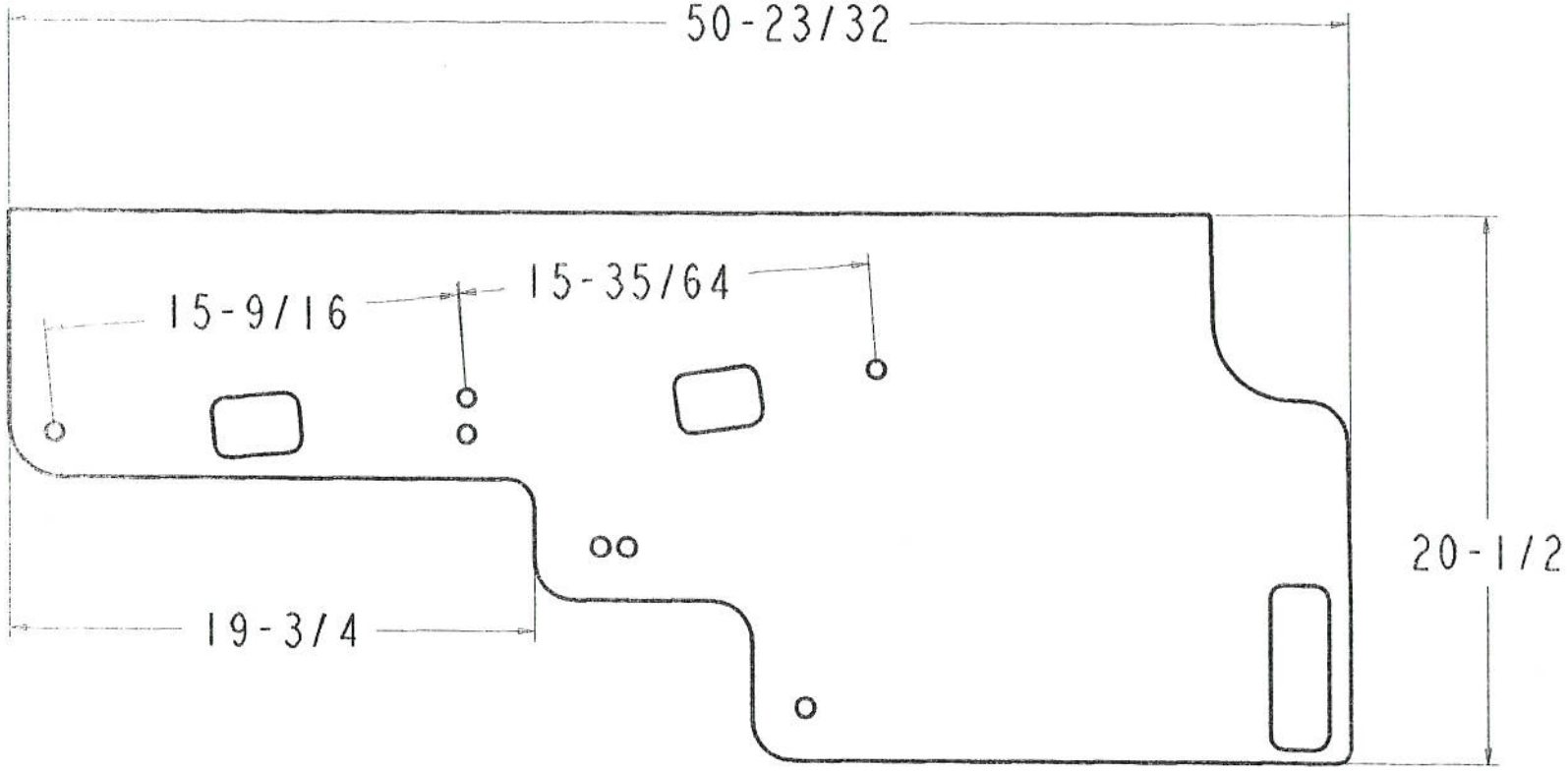

PART#30082-032 -- 1/2" MAT'L -- "ELIS TABLE BY-PASS (MIDDLE)"

AFE

ADVANCED FARM EQUIPMENT

BJ

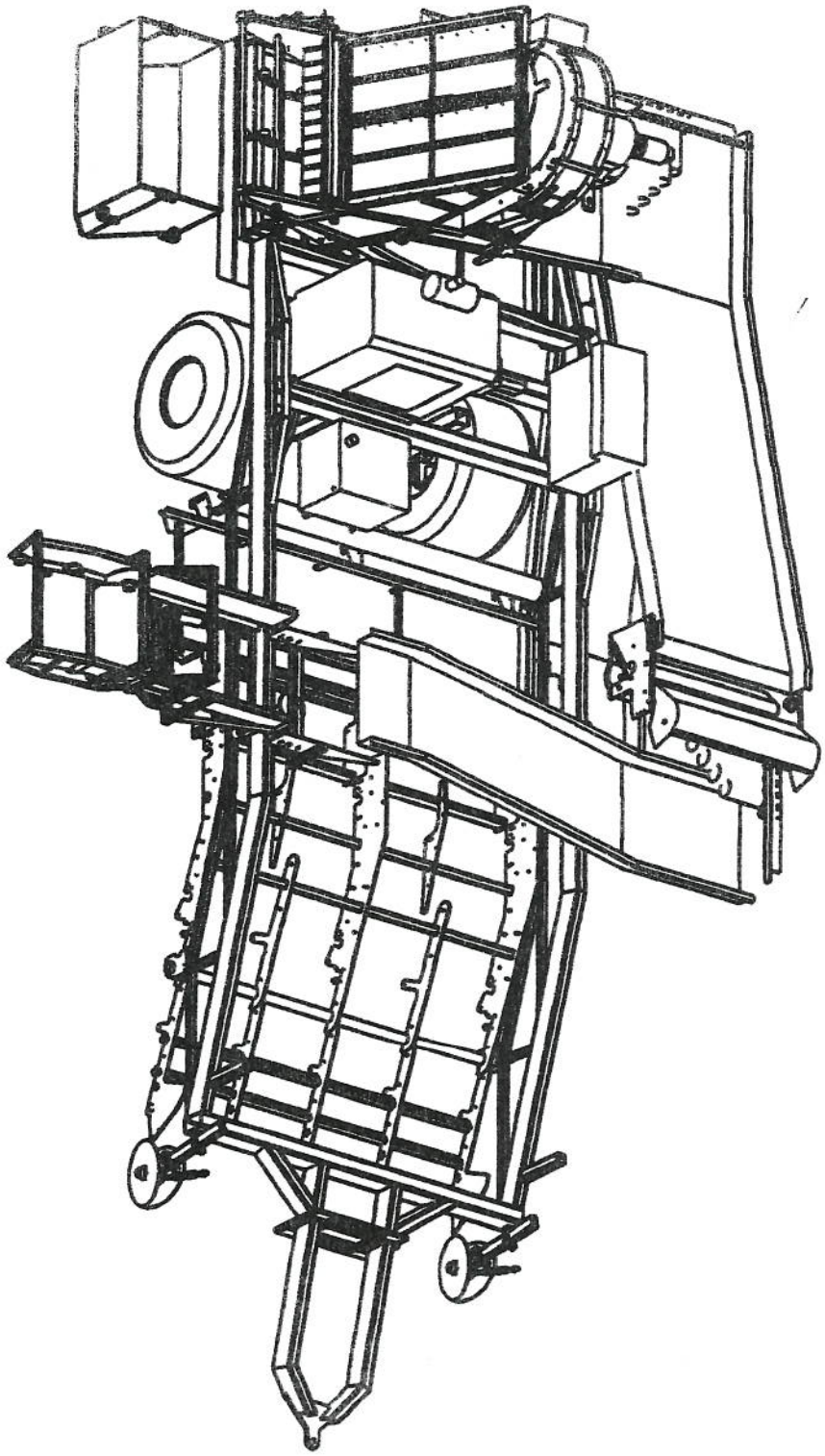

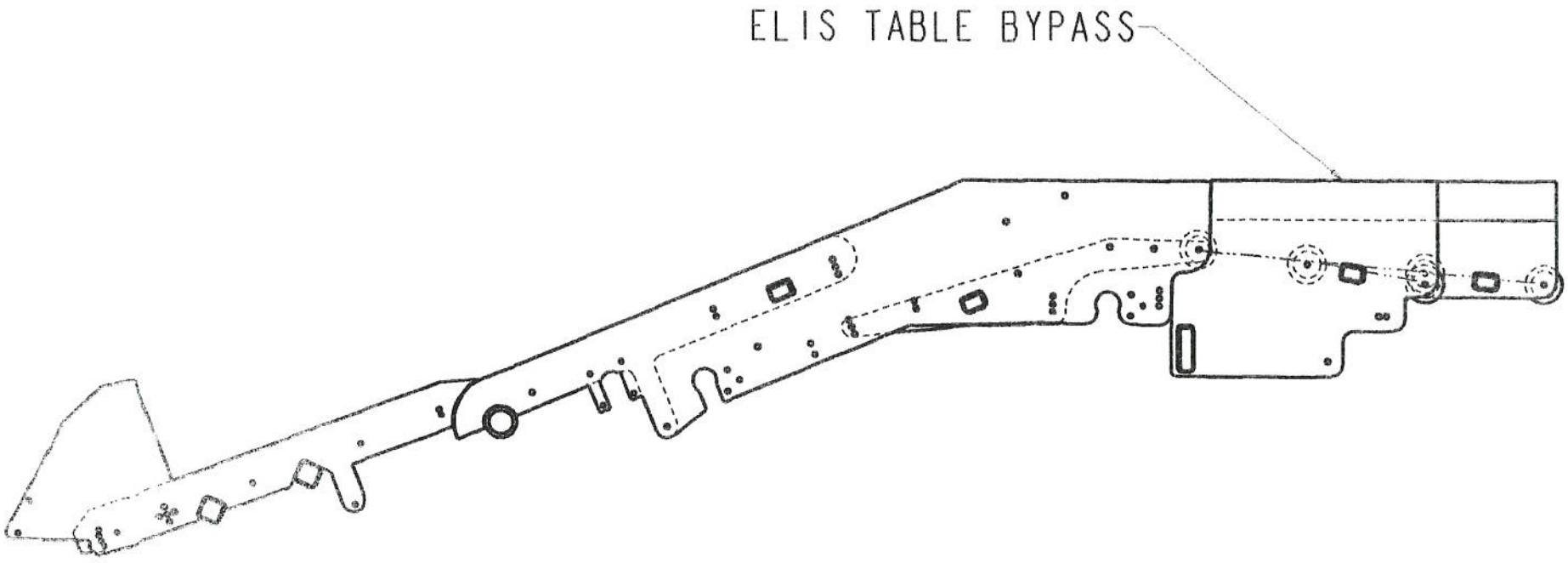

DIGGERBED SIDE VIEW

AFE	ADVANCED FARM EQUIPMENT
	BJ

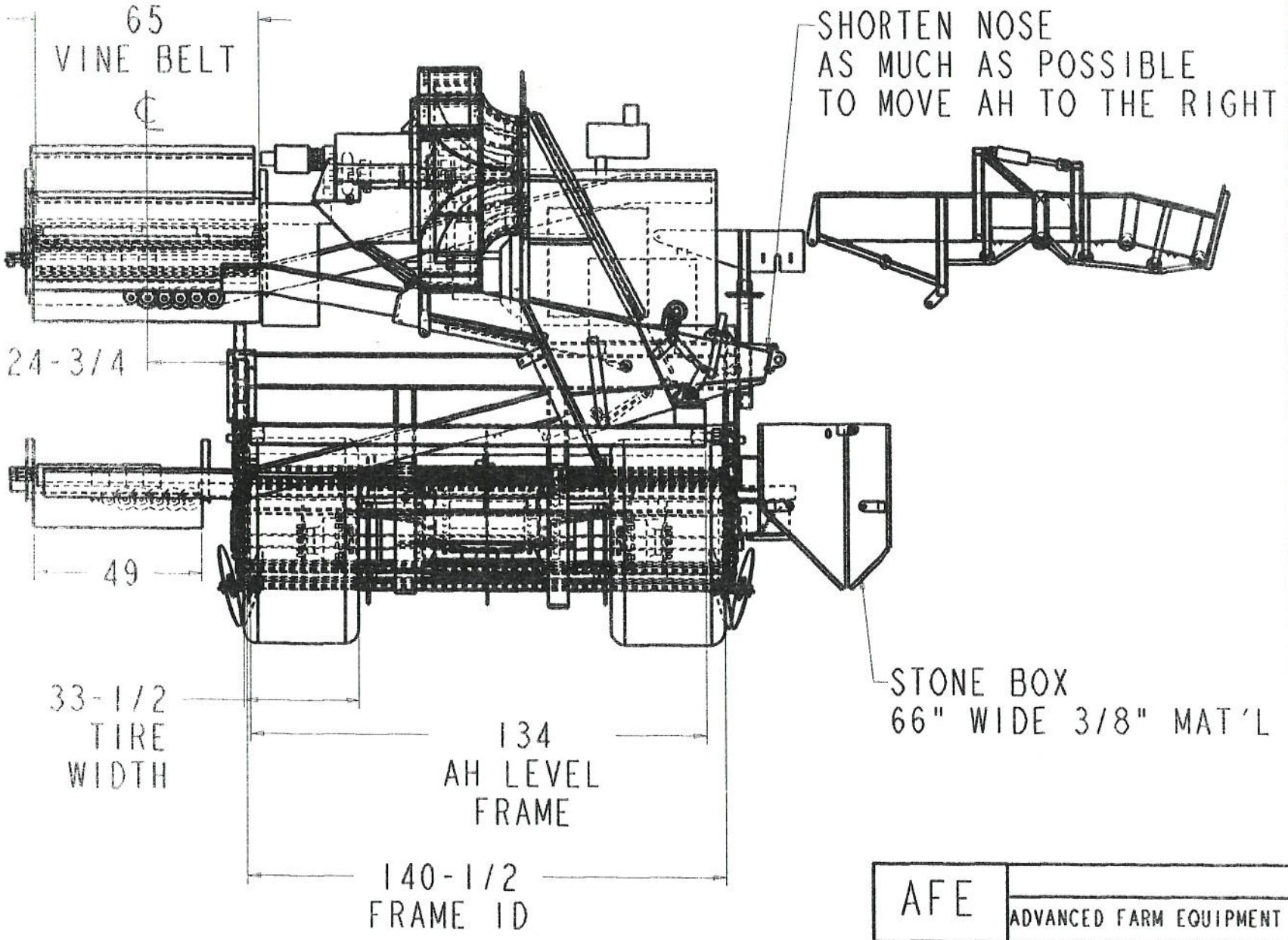

AFE

ADVANCED FARM EQUIPMENT

BJ

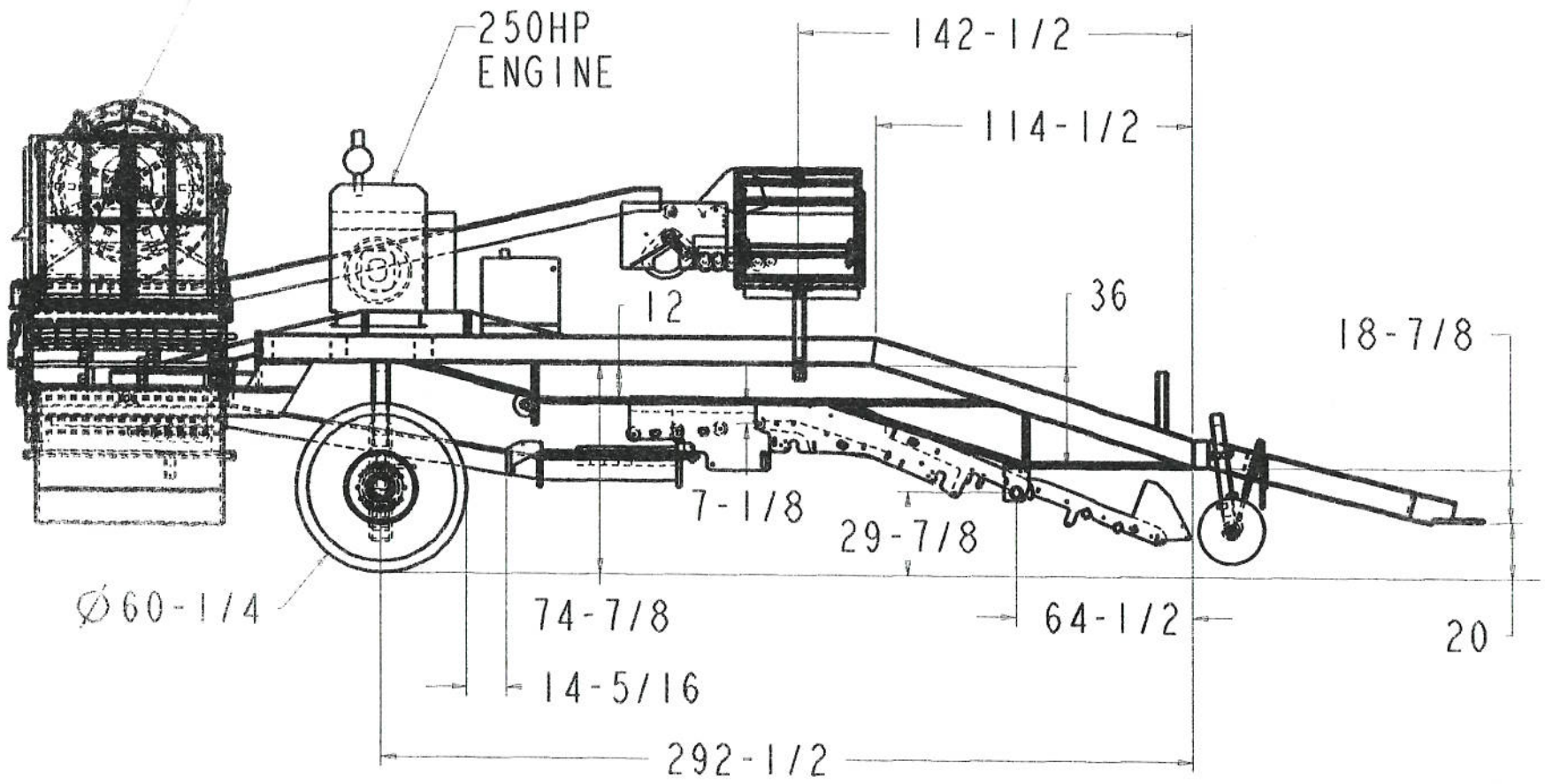

NOTE: WISCONSIN FRAME

4 ROW PT HARV -- SIDE VIEW

AFE	ADVANCED FARM EQUIPMENT
	BJ

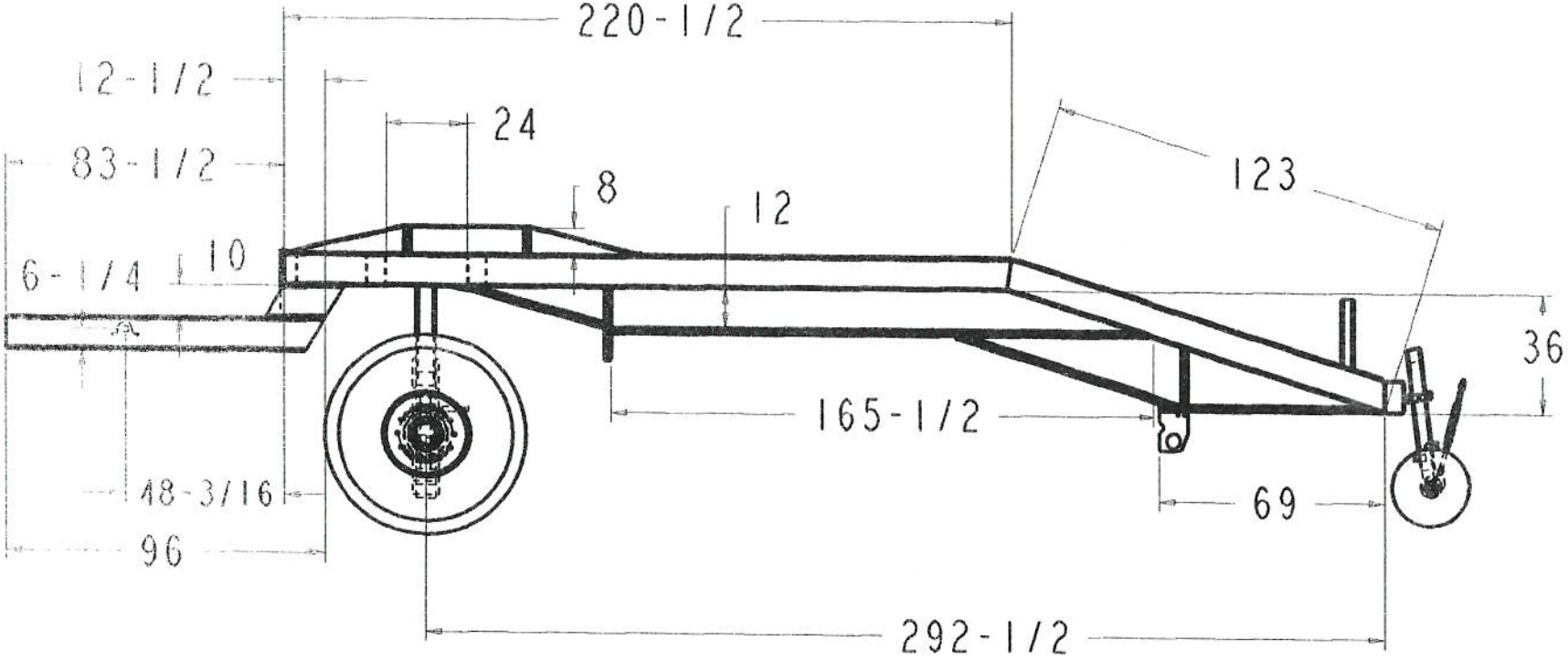

4 ROW PT FRAME SIDE VIEW

REAR AXLE MAY CHANGE

AFE

ADVANCED FARM EQUIPMENT

BJ

SALES ORDER

Advanced Farm Equipment LLC
5773 Crystal Road
Vestaburg MI 48891
(989) 268-5711

Sales Order Number 026746

Sales Order Date 09/25/06

Page 1

SOLD TO Advanced Farm Equipment
5773 Crystal Road
Vestaburg, MI 48891

SHIP TO Advanced Farm Equipment, LLC
5773 Crystal Rd
Vestaburg MI 48891

P.O. Number		**Terms**	Cash on Del.
Ship Via	N/A	**Salesperson**	Greg Merrihew
Project Code	N/A	**Required**	09/25/2006

ITEM	ORDERED	SHIPPED	BO	DESCRIPTION	PRICE	AMOUNT	TAX
	1.000			Finish Dept Other Work 06012 4RPTH65AH	n/a		

QTY	Description

QTY	Description

HYDRAULICS FINISH MATERIALS LIST

BEGINNING DATE 9-25-06 PROJECT NO. 626746
END DATE 10-16-06

QTY	PART NUMBER	DESCRIPTION
1	2015-011	3123
1	2015-033	4309
1	20039-001	6065W
4	20062-001	728006
2	20064-001	31-10005
1	20004-001	D12-20A5-06WC
2	20239-001	51302 Disconnect
2	20296-001	44032 FACEPLATE
2	20259-001	1" RED HEAT SHRINK 12" pc.
2	20260-001	1" BLACK HEAT SHRINK 12" pc
14	20261-001	SOLDER PELLET 3/0
41FT	20262-001	2/0 WELDING CABLE
13	20263-001	3/0 LUG 3/8" EYE
1	20264-001	3/0 LUG 1/2" EYE
1	22072-023	160 AMP ALTERNATOR
10	2035-03001	R-11 w/ STAND OFF
2	2035-03000	R-11 w/out STAND OFF
8	2035-04001	TAPERED NOSE CONE
16	2035-00008	5" SUPERIOR
84	2035-00007	4" SUPERIOR
100	2035-07002	1 1/2" STAND OFF
32	2035-05005	R37
18	2035-01015	3 1/2 FLANGED RUBBER
6	2035-01016	3 1/2 NO FLANGE RUBBER
73	2035-01009	3 1/2 FLANGED STEEL
23	2035-01008	3 1/2 NO FLANGE STEEL
43	2035-01001	3 1/2 FLANGED KRYPTANE
23	2035-01000	3 1/2 NO FLANGE KRYPTANE
1	2035-01004	3 1/2 RUBBER w/ 8" FLANGE
11	2035-H45M10E4	

HYDRAULICS FINISH MATERIALS LIST

BEGINNING DATE 9-25-06 PROJECT NO. 026746
END DATE 10-16-06

QTY	PART NUMBER	DESCRIPTION
6	2035-H45M14RE4X	
6	2035-H45M10RE4X	
8	2035-H45M10RB5X	
4	30029-013	DIGGER BLADE
4	30024-013	CENTER POINT
2	20010-020	PARAFLEX FLANGE
1	20009-020	PARAFLEX ELEMENT
1	21018-018	3" TAPERLOCK
1	21019-018	1 3/4" TAPERLOCK
60SQFT	1/4" UHMW	
40SQFT	1" UHMW	
1	2002-17	SERIAL # PLATE
2	20076-006	BRE82F
1		STEERING BOX ASSY
289		14pt - 1 1/2 SQ BORE NOFFSINGER 70DURO
114		7pt - 1 1/2 SQ BORE NOFFSINGER 70 DURO
1	2002-01	SLOW MOVING SIGN
4	2002-04	AFE LOGO
7	2002-06	SMALL LENCO
4	2002-10	ROTATING PARTS HAZARD
2	2002-12	PINCH POINT
1	2002-09	OVERHEAD WIRE HAZARD
7	2002-07	WARNING MOVING PARTS HAZARD
10	2002-16	DANGER - TO PREVENT INJURY
2	2002-14	THROWN OBJECT HAZARD
1	2002-08	HIGH PRESSURE FLUID HAZARD
157		5/8-11 x 3 1/2 HHCS
26		5/8-11 x 4 HHCS
4		5/8-11 x 5 HHCS
36		5/8-11 x 6 HHCS

HYDRAULICS FINISH MATERIALS LIST

BEGINNING DATE 9/25/06 PROJECT NO. 026746
END DATE 10/16/06

QTY	PART NUMBER	DESCRIPTION
5		5/8-11 x 6 1/2 HHCS
2		5/8-11 x 11 HHCS
1		5/8-11 x 12 HHCS
34		1/2-13 x 4 1/2 HHCS
8		1/2-13 x 7
231		5/8-11 SPINLOCK
42		1/2-13 SPINLOCK
1 GAL		80w90 OIL
1 GAL	2036-0003	15w40 OIL

SALES ORDER

Advanced Farm Equipment LLC
5773 Crystal Road
Vestaburg MI 48891
(989) 268-5711

Sales Order Number 026859

Sales Order Date 10/09/06

Page 1

SOLD TO Advanced Farm Equipment
5773 Crystal Road
Vestaburg, MI 48891

SHIP TO Advanced Farm Equipment, LLC
5773 Crystal Rd
Vestaburg MI 48891

P.O. Number		**Terms**	Cash on Del.
Ship Via	N/A	**Salesperson**	Greg Merrihew
Project Code	N/A	**Required**	10/09/2006

ITEM	ORDERED	SHIPPED	BO	DESCRIPTION	PRICE	AMOUNT	TAX
	1.000			Electrical 06012 4RPTH65AH		n/a	

QTY	Description

QTY	Description

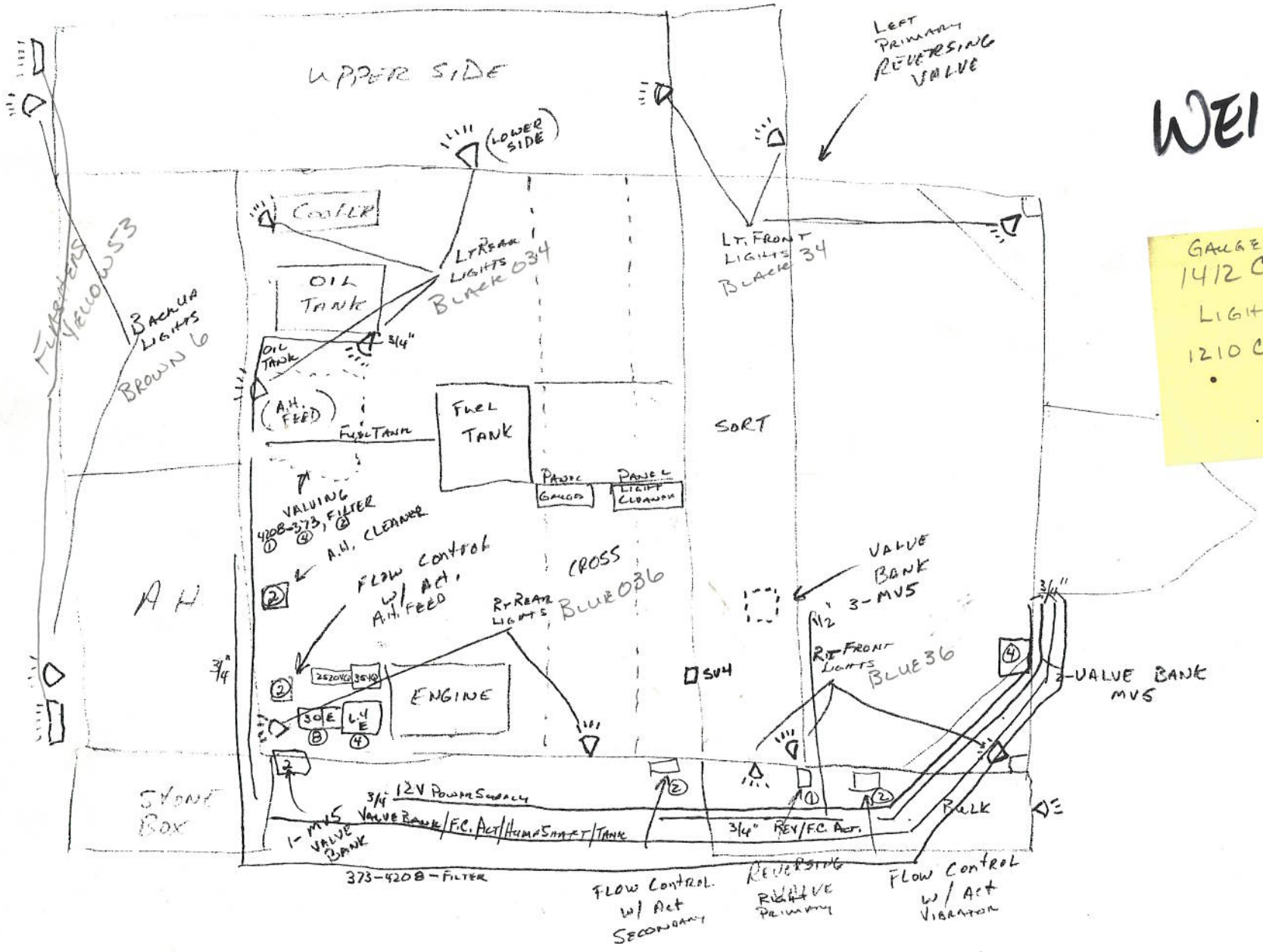

WEIGHT?

GAUGE
1412 CH ENCLOSURE
LIGHTS
1210 CH ENCLOSURE

VIN
989-525-4539

MS 83
989-525-8826

ADDED JOYSTICK CONTROL 12-21-17

REVISIONS				
ZONE	REV	DESCRIPTION	DATE	APPROVED

Note:
1-Cyber-Tech, Inc. Proposed Handy-Grip® wiring to be APPROVED by the customer prior to manufacture and installation for operator use.

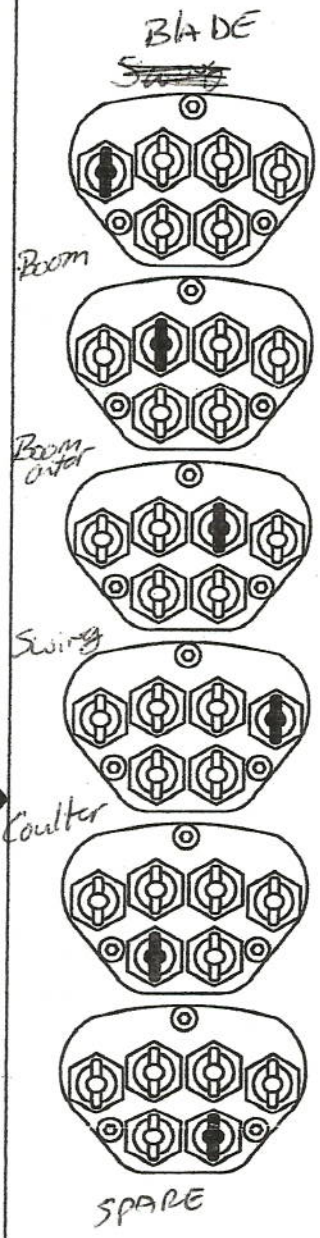

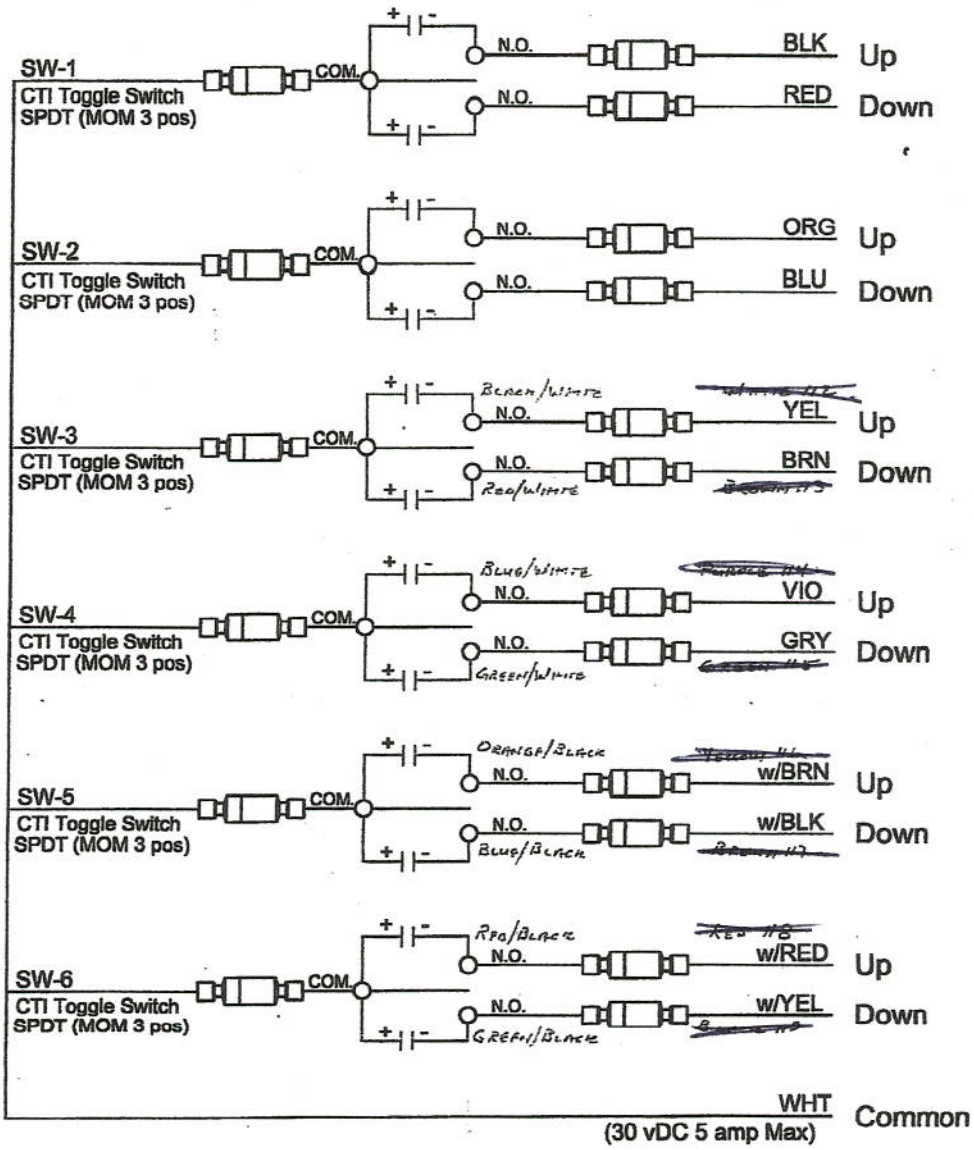

CAUTION:
Metal Handle MUST Be Grounded For Safe Operation!

Cyber-Tech, Inc. P.O Box 23801 Portland, Or 97281-3801	**8901 Handy-Grip** **(6 Togg w/Boots)**			
	SCHEMATIC DIAGRAM			
1.800.621.8754	SIZE	FSCM NO. 503-620-8580	DWG NO. CTI-2021541	REV
www.cyber-tech.net	SCALE 1:1	D DOWERS	SHEET 1 OF 1	