#1620/#1621 Offutts

4 RSP H W/65" AH

4 Row w/ 65" Airhead

1997 HARVEST

Ground Drive

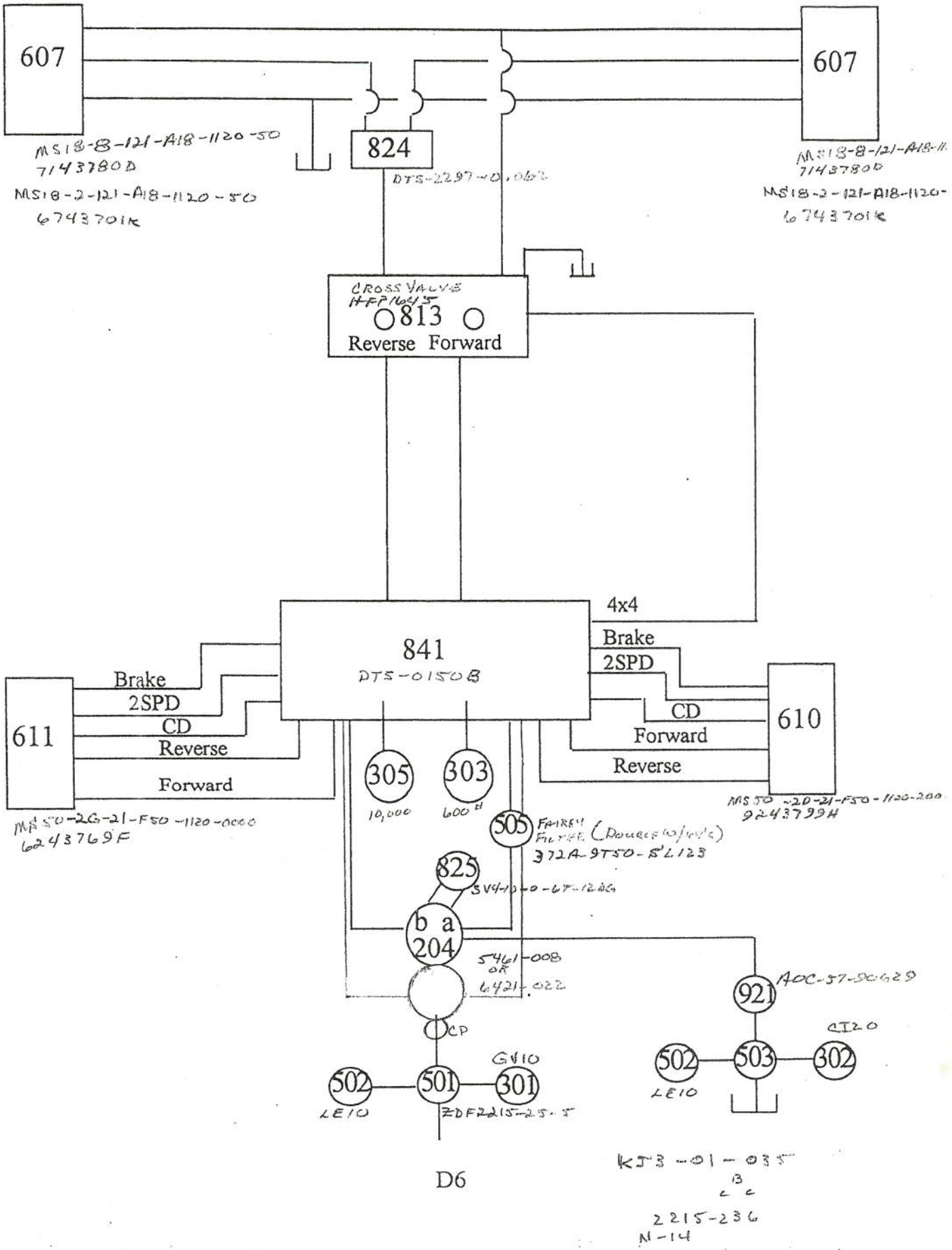

4 Row w/ 65" Airhead

Fan Circuit

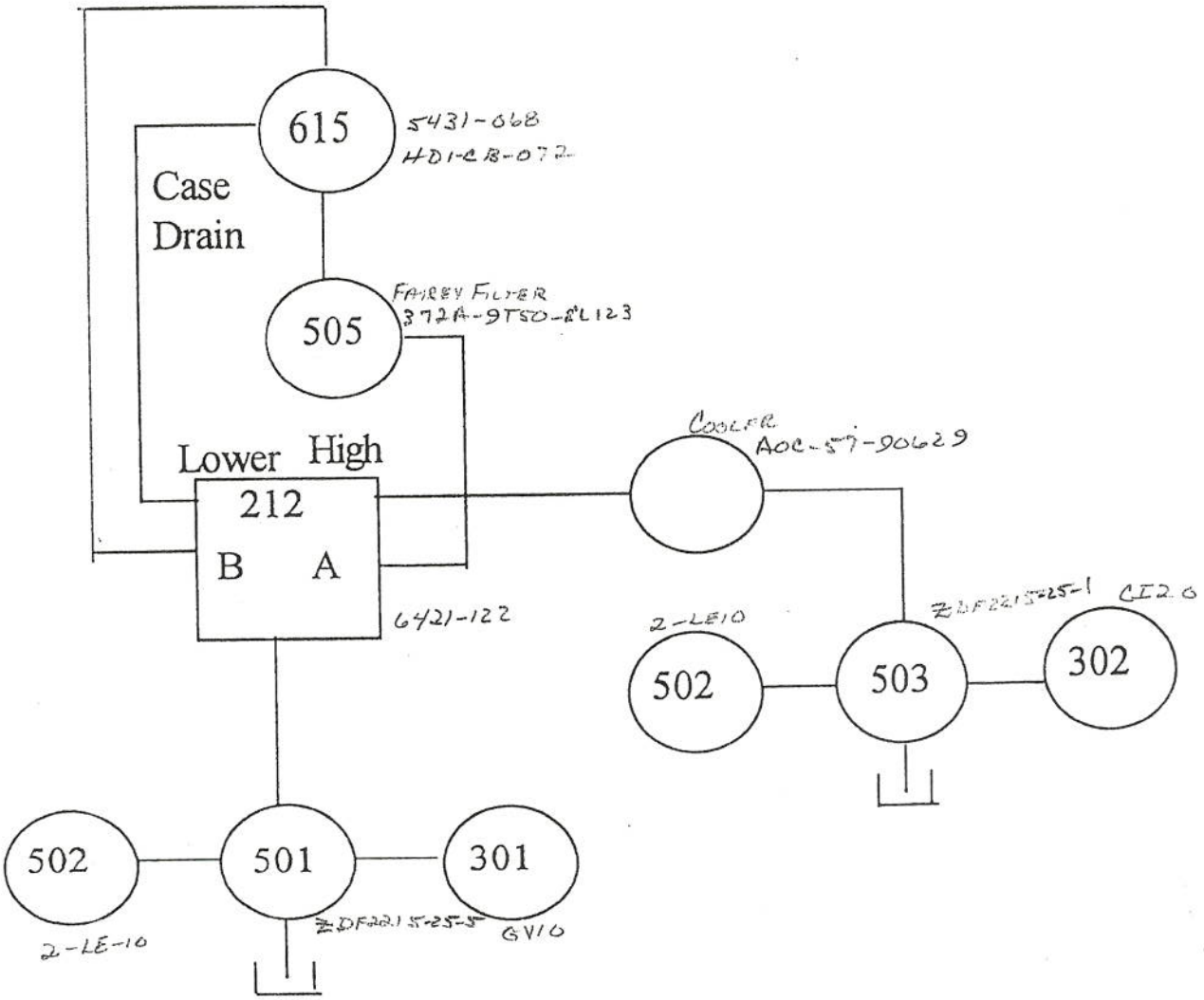

4 Row w/ 65" Airhead

Right Primary-Left Primary

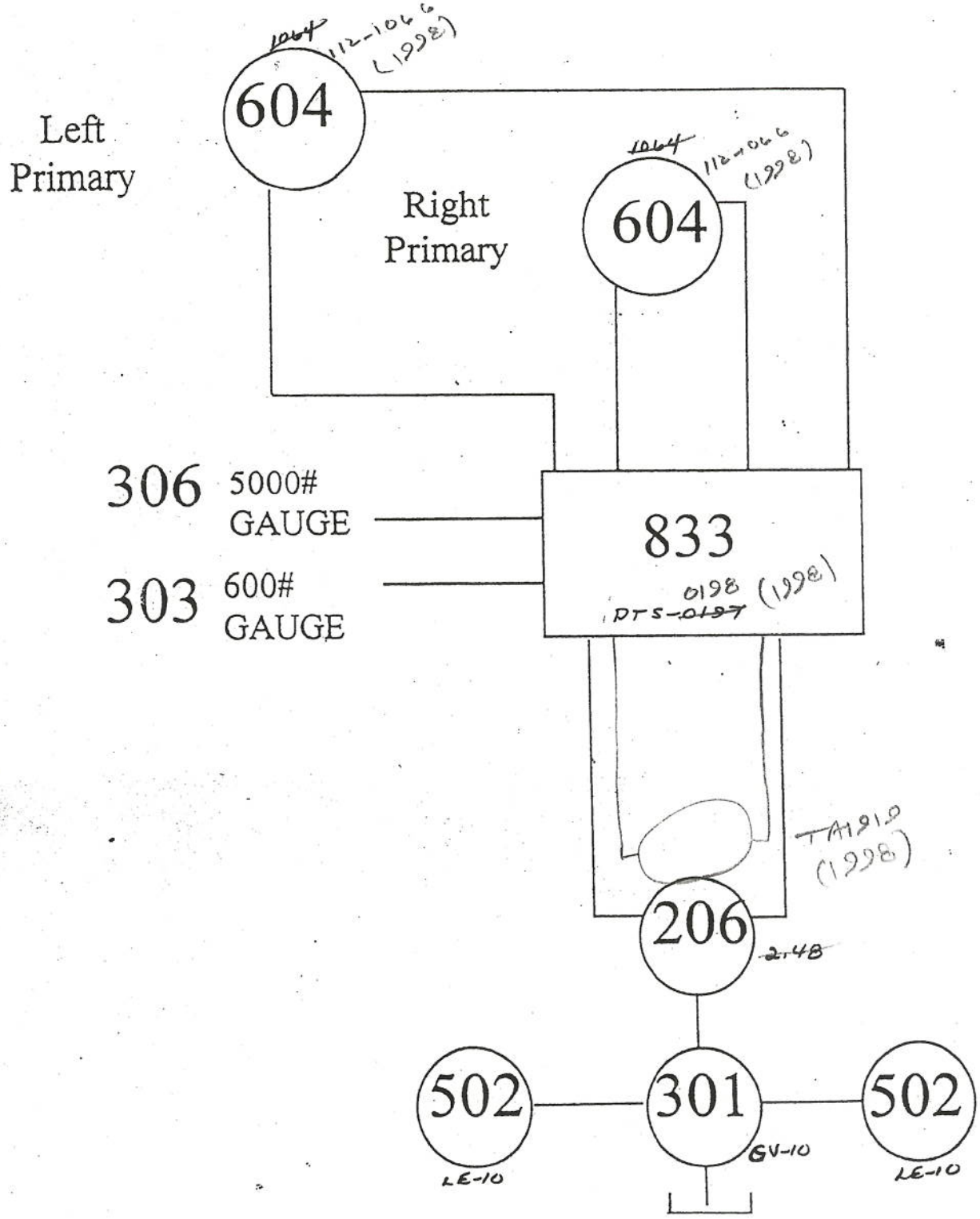

4 Row w/ 65" Airhead

Vibrator, Deviner, Secondary Star Rollers, and Cross Conveyor

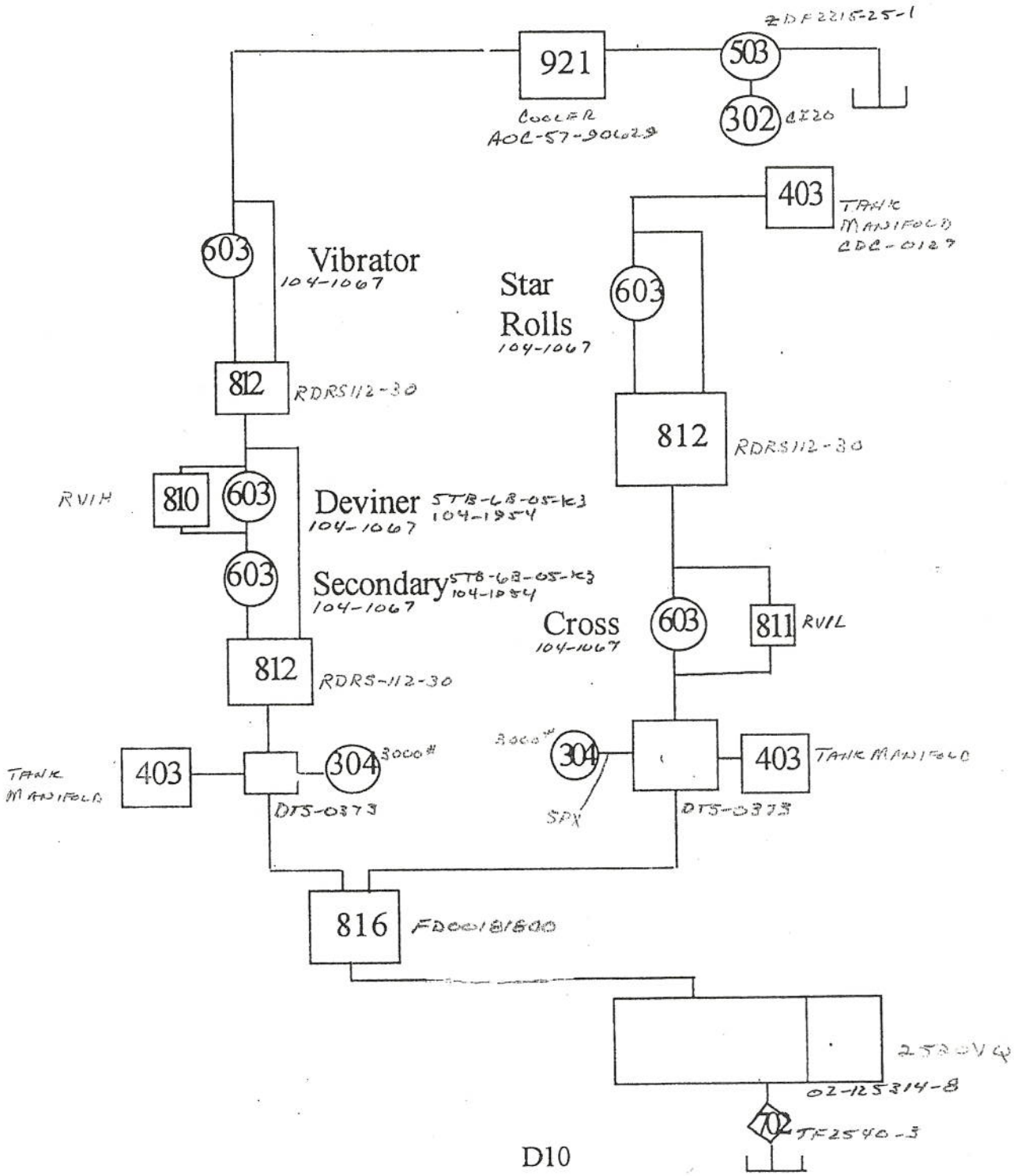

4 Row w/ 65" Airhead

Side Return, Stone, and Side Conveyors

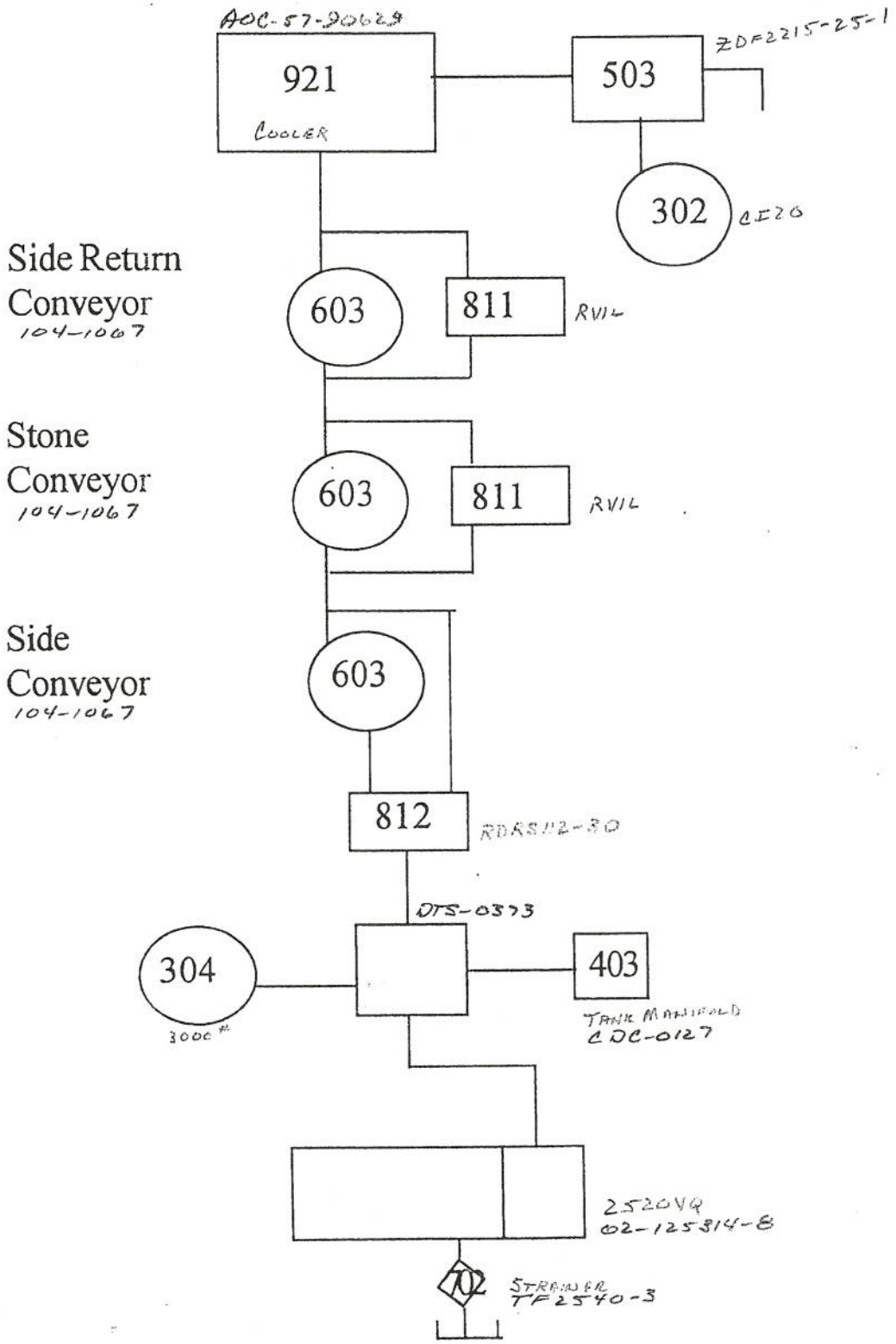

4 Row w/ 65" Airhead

Sorting Table, Vine Belt, Distributor Rollers, and Bulk Loader

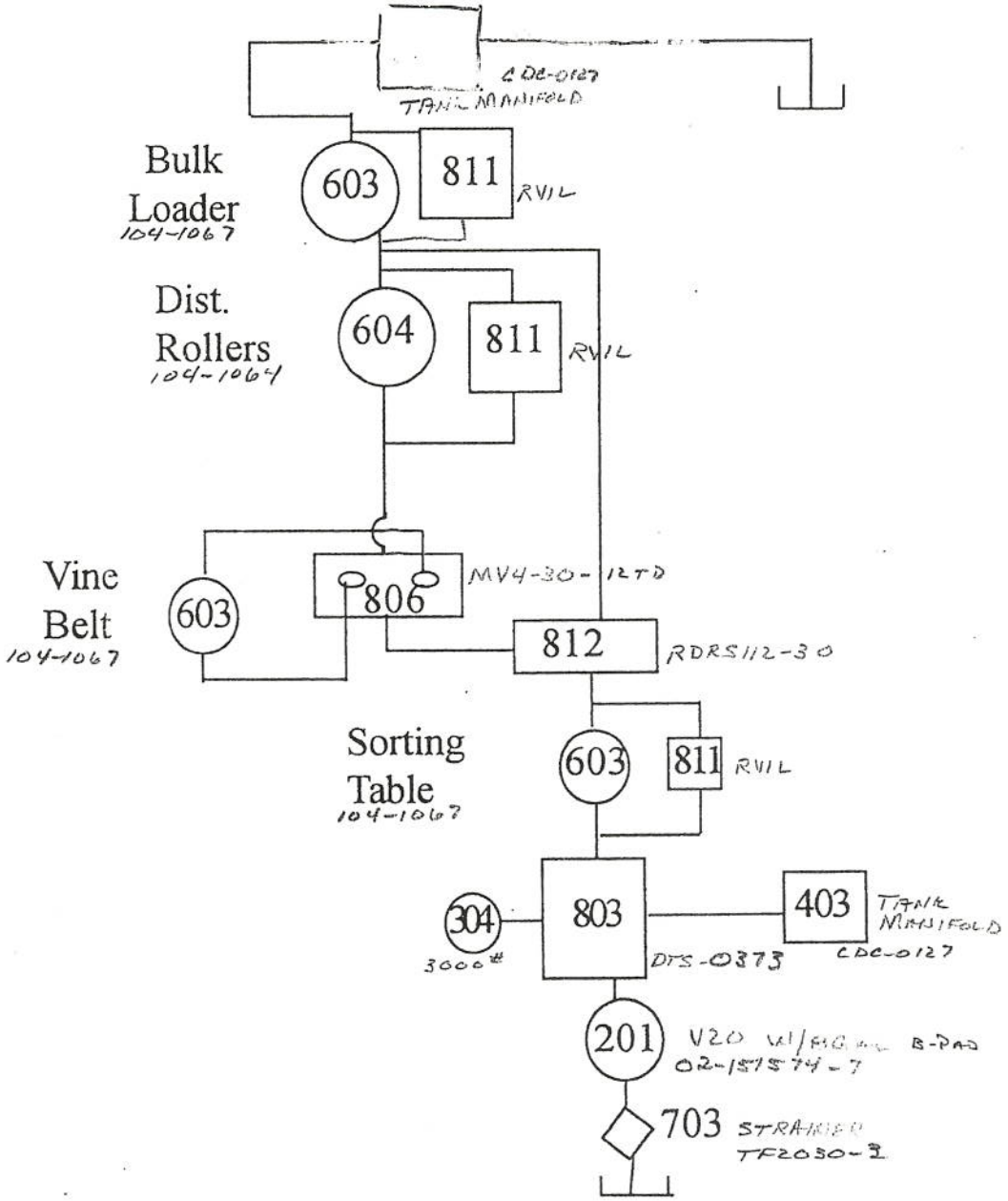

4 Row w/ 65" Airhead

Steering-Valve Bank-Fan Cleaner

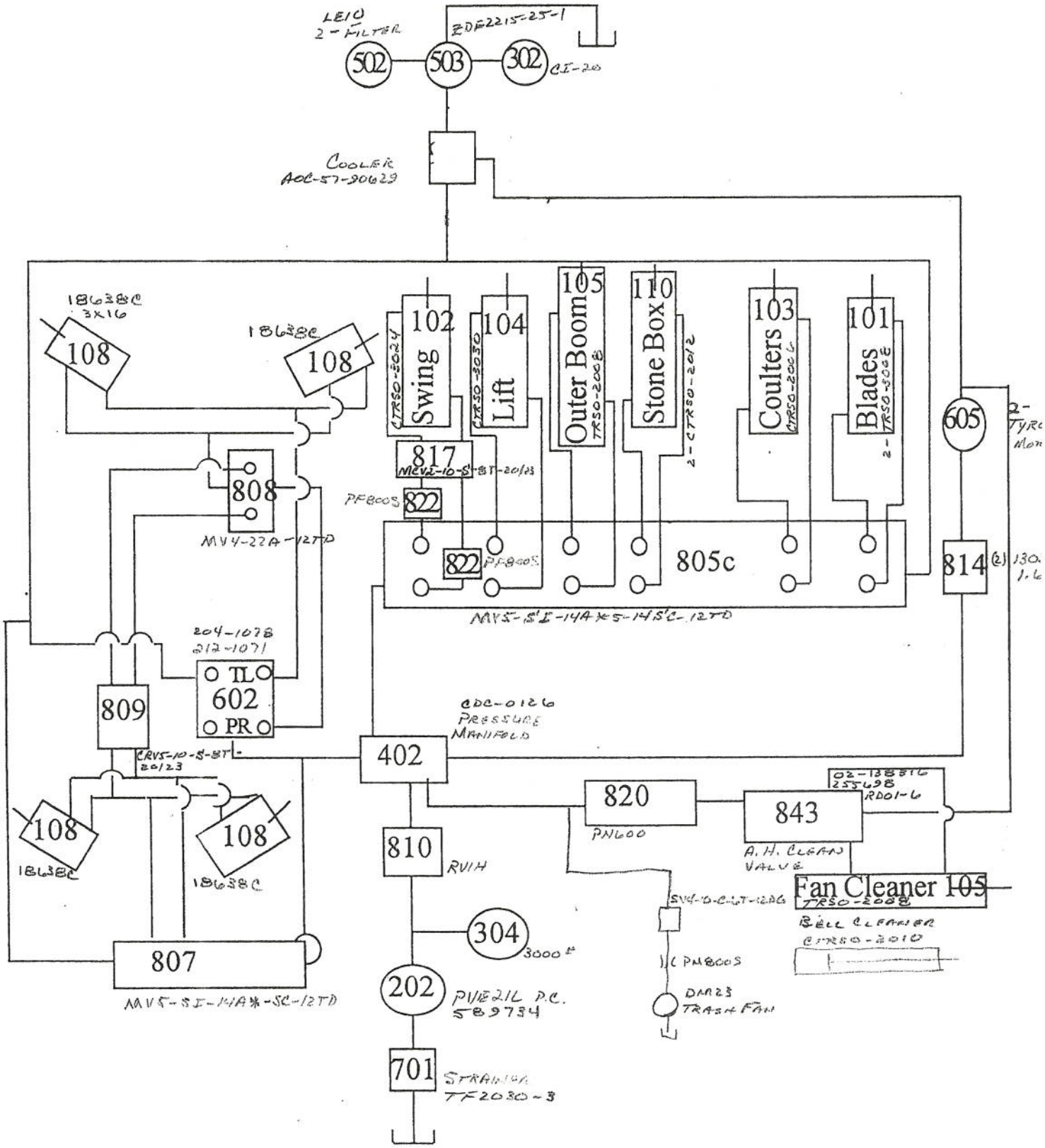

#162

SPEEDOMETER - 4X MULTIPLIER 1995

04 80	#1	12V DC+	BROWN	FUSE #15
03 70	#2	GROUND ±	BLUE	
02 60	#3	IMPULSE	DARK GREEN LOT 28(2)	
01 50	#4			
	#5	12VDC +	BROWN	
	#6	GROUND ±	BLUE	POCHINI HARNESS
	#7	IMPULSE	BLACK	
	#8			

RED
GREEN
WHITE } THERMOSTAT WIRE

1996

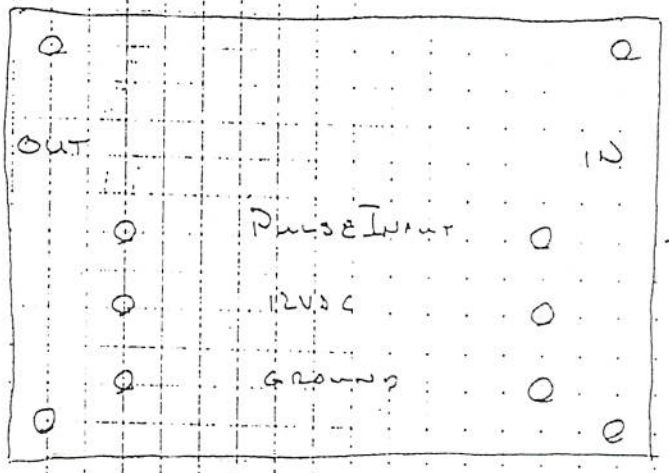

GND

GREEN LOT

RED

GREEN

POCHINI.

BLACK (CABLE) WHITE (THERM. WIRE)

BROWN (CABLE) RED (THERM WIRE)

BLUE (CABLE) GREEN (THERM WIRE)

Park Brake		Rear Steer	Speed Controls Prim (Left)	Prim (Right)	Sec	Side	Vib	Vine Belt Rev.	Up (Down)	Air/Head Clean Manual	Manual (Auto)
O	O	O	O	O	O	O	O	O	O	O	O

							High	4x4	Work Lights					
O	O	O	O	O	O	O	O	O	O	O	O	O	O	O
Master	Prim	Sec	Cross	Side	Sort	Fan	Low	4x2	Left	Right	Backup	Road	Hazard	

O High Pressure	O Filters	O Fan	O Hyd. Oil Level	O Hydro Shaft	O Reverse	O Right	
O	O Grn Drive	O	O Sec Reverse	O Prim 4	O Left		

#1621

#1621

AIR HEAD CLEANER

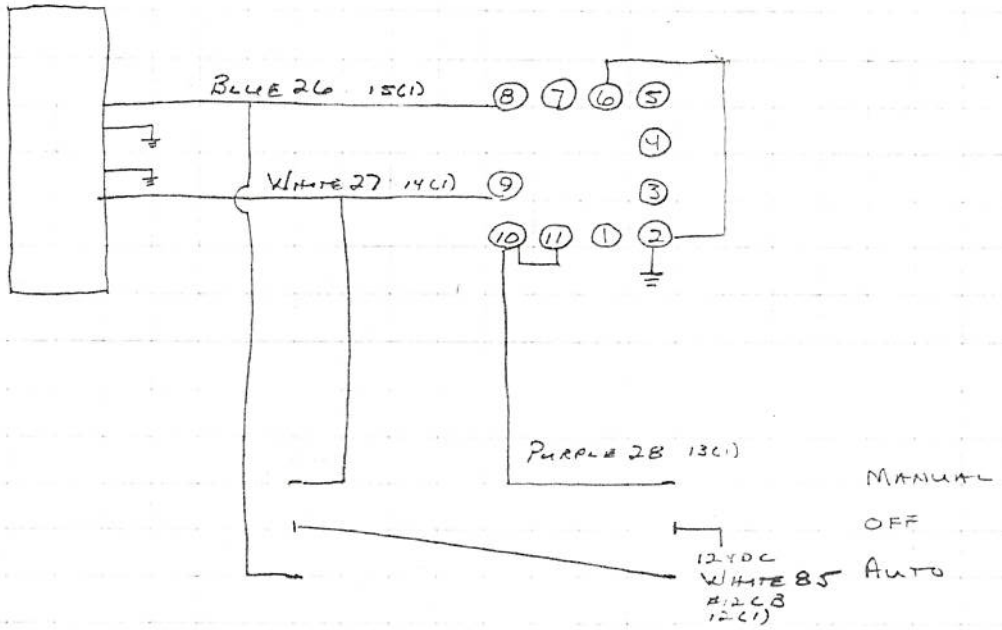

MANUAL

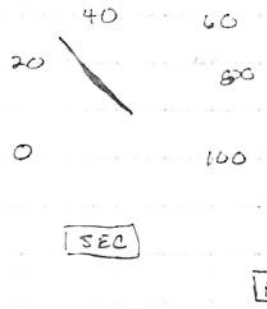

HOT

30A.	30A.	30A.	20A.	30A.	20A	20A.	30A	20A.	20A.	30A.	30A	20A
13	12	11	10	9	8	7	6	5	4	3	2	1
A/C	ACTUATORS	BACKUP	FUEL	CAB	CAB	CYLINDERS	RADIO	CONVEYORS	PARK	LEFT	RIGHT	HAZARD
	VINE	ROAD	PUMP	LIGHTS	LIGHTS	2-SPEED	WIPER		STEER	WORK	WORK	TURN
	BELT	LIGHTS	RED 81		SWITCH	4X4			WARN	LIGHTS	LIGHTS	LIGHTS
					RADIO.	GAUGE	RED 12 2(3)		SPEEDOMETER			
					MEM	PANEL	RED 18 1(3)		GRO DRIVE BLUE/BLK 8			
					RED 22 6(3)	RED 21 (4)			FAN YELLOW/BLACK 15			
									HYD. O.L. LEVEL YELLOW/ORG 25			
									CROSS PRESS BLACK 60			

20A	20A	30A
16	15	14
SPARE	AUXILIARY OUTLET BOX BLACK 156 15(3) 12GA.	SPARE

#162

BLACK	1	4X4 TO RELAY	PANEL
	12 RED	2-SPEED TO 13(2)	13(2)
	17 BLUE	BRAKE TO BRAKE SOLENOID	9(1)
	22 ORANGE	SORTING CONVEYOR SOLENOID.	24(2)
RED	2	TO RELAY RA TO START SOLENOID	PANEL
	7 BLACK	TACHOMETER TO 5(2)	5(2)
	18 BLUE	TACHOMETER SENSOR TO GROUND	PANEL
	23 ORANGE	HYDRAULIC OIL TEMPERATURE SENSOR	4(2)
BLUE	3	GROUND DRIVE FILTER #3 TO 21(2)	21(2)
	8 BLACK	GROUND DRIVE FILTER #1 TO #4 C.B.	PANEL
	13 RED.	ST 87 IGNITION SIDE TO FUEL SHUTOFF SOL.	PANEL
	24 ORANGE	A/C PLUG ORANGE 214 TO A/C CLUTCH	
ORANGE	4	WATER TEMPERATURE SENDER TO GAUGE	13(3)
	9 BLACK	WATER TEMPERATURE SENDER TO LIGHT	12(3)
	14 RED	OIL PRESSURE SENDER TO GAUGE	3(3)
	19 BLUE	OIL PRESSURE SENDER TO LIGHT	9(3)
YELLOW	5	SIDE CONVEYOR SOLENOID	16(2)
	10 BLACK	FAN FILTER TO #4 C.B. TO #1	PANEL
	15 RED	FAN FILTER TO #3	20(2)
	20 BLUE	HYDRAULIC OIL LEVEL SENSOR TO BUZZER	22(2)
	25 ORANGE	HYDRAULIC OIL LEVEL SENSOR TO #4 C.B.	PANEL
BROWN	6	BACK UP LIGHTS	PANEL
	11 BLACK	PRIMARY CONVEYOR SOLENOID	15(2)
	16 RED	CROSS CONVEYOR SOLENOID	17(2)
	21 BLUE	TRASH FAN SOLENOID.	14(2)

DTS 0373

SORT	CROSS	SEC	SIDE	→ REAR

DTS-0150

2 SP.	BRAKE	4X4
O	O	O

BRAKE PRESSURE SWITCH #1 12VDC
#3 N.O.

DTS-0160

OUT	GREEN 607	INPUT PULSE	BLACK	IN.	1
	RED	12VDC	BROWN		2
	GREEN	GROUND	BLUE		3

TEMPERATURE SWITCH

12VDC	
NC	
NO	

#1621

1997

Plug #1.

Pin			
1	92	Yellow	CB 1 To Hazard Stat To Switch
2	91	Green	CB 2 To Right Work Light Relay & Switch
3	90	Orange	CB 3 To Left Work Light Relay & Switch
4	017	Black	CB 4 To Brake, Steer, Warning.
5	060	Black	
6	89	Yellow	CB 5 To Master Switch
7	199	Black	Hi/Lo Switch To Relay
8	0012	Black	CB 7 To 2-Speed & White In Cybertech Handle
9	0017	Black	Brake Switch To Brake Solenoid (Black/Blue 17)
10	88	Brown	CB 11 To Road & Back Up Relays & Switch
11	85	White	CB 12 To Actuator Switches
12			
13	28	Purple	Auto Switch To #10 On Timer
14	27	White	Manual Switch To #9 On Timer To Solenoid
15	26	Blue	Manual Switch To #8 On Timer To Solenoid
16	46	Brown	Vine Belt Actuator
17	45	Green	Vine Belt Actuator
18	39	White	Vine Belt Reverse
19	33	Yellow	Primary Vibrator Actuator
20	32	Red	Primary Vibrator Actuator
21	70	Red	Side Conveyor Flow Control Actuator
22	69	Purple	Side Conveyor Flow Control Actuator
23	68	White	Rear Steer Solenoid
24	83	Purple	Common On Rear Steer Sensors

#1621

1997

PLUG #2

PIN			
1	153	BROWN	LEFT PRIMARY REVERSE
2	154	ORANGE	RIGHT PRIMARY REVERSE
3	059	BLACK	PARK SWITCH TO 14(5) N.O. REDOOIS TO SMX SWITCH TO SOL
4	23	RED/ORANGE	HYDRAULIC OIL TEMPERATURE SENSOR (TO YELLOW 752) GAUGE
5	07	RED/BLACK	TACHOMETER SENSOR (TO DARK GREEN 602) GAUGE
6	155	GREEN	SECONDARY/DEVINER REVERSE
7	54	BROWN	RIGHT TURN SIGNAL
8	53	YELLOW	LEFT TURN SIGNAL
9	06	BROWN	BACK UP LIGHT SWITCH TO RELAY
10	036	BLUE	RIGHT WORK LIGHT SWITCH TO RELAY
11	034	BLACK	LEFT WORK LIGHT SWITCH TO RELAY
12	01	BLACK	4X4 SWITCH TO RELAY
13	012	BLACK/RED	2-SPEED SWITCH TO SOLENOID
14	021	BROWN/BLUE	TRASH FAN SWITCH TO SOLENOID
15	011	BROWN/BLACK	PRIMARY SWITCH TO SOLENOID
16	05	YELLOW	SIDE CONVEYOR SWITCH TO SOLENOID
17	016	BROWN/RED	CROSS CONVEYOR SWITCH TO SOLENOID
18	82	RED	SECONDARY CONVEYOR SWITCH TO SOLENOID
19			
20	15	YELLOW/RED	LIGHT TO FAN FILTER #3
21	03	BLUE	LIGHT TO GROUND DRIVE FILTER #3
22	020	YELLOW/BLUE	BZL-12 SWITCH TO HYDRAULIC OIL LEVEL SENSOR
23	61	WHITE	CROSS CONVEYOR PRESSURE SWITCH "N.O." TO BZ 6562
24	022	BLACK/ORANGE	SORTING CONVEYOR SWITCH TO SOLENOID
25	143	ORANGE	CB #7 TO HYDRO NEUTRAL SWITCH #1
26	144	ORANGE	HYDRO NEUTRAL SWITCH #2 TO PANEL RB
27	094	PURPLE	ROAD LIGHT SWITCH TO RELAY
28	607	GREEN	SPEEDOMETER TO 4X MULTIPLIER
29	149	RED	SECONDARY SPEED ACTUATOR
30	150	YELLOW	SECONDARY SPEED ACTUATOR
31	145	ORANGE	PRIMARY ACTUATOR (RIGHT)
32	146	BLUE	PRIMARY ACTUATOR (RIGHT)
33	147	ORANGE	HUMP SHAFT ACTUATOR
34	148	BLUE	HUMP SHAFT ACTUATOR
35	151	BLACK	LEFT PRIMARY ACTUATOR
36	425	GREEN	HIGH TEMPERATURE IN PRIMARY CIRCUIT TO BZL-12 (BROWN 123)
37	152	RED	LEFT PRIMARY ACTUATOR

#1621

1997

PLUG 3 LARGE 16 PIN

PIN					
* 1	RED	18	POWER TO WIPER		
2	RED	12	POWER TO RADIO		
3	PURPLE	705	OIL PRESSURE TO GAUGE	ORANGE/RED	14
4	BLACK	20	GROUND		
5	BROWN	503	LIGHT SWITCH ROAD POSITION TO RELAY		
6	RED	22	POWER TO DOME-PANEL-LIGHT SWITCH-RADIO MEMORY		
* 7	BROWN	507	CAB FIELD LIGHT RELAY TO CAB FIELD LIGHTS		
8	YELLOW	755	HYDRAULIC OIL TEMPERATURE WARNING LIGHT		
9	ORANGE	924	OIL PRESSURE LIGHT TO SENDER	ORANGE/BLUE	19
* 10	BROWN	526	CAB ROAD LIGHT RELAY TO CAB LIGHTS		
11	BLUE	652	FUEL GAUGE TO SENDER	WHITE	58
12	DARK BLUE	653	WATER LIGHT TO SENDER	ORANGE/BLACK	9
13	DARK GREEN	617	WATER GAUGE TO SENDER	ORANGE	4
14	BROWN	504	LIGHT SWITCH FIELD POSITION TO RELAY		
* 15	BLACK	156	#15 C.B. TO OUTLET BOX 12G A BLACK		
16					

* LARGE PINS

#1621

PLUG #4

	PIN				
		1		RED	21(4) TO PIN 4 ON GAUGE PANEL 12VDC
SW1		2	6	BLACK	STONE BOX
1		3	6	RED	STONE BOX
2		4	4	ORANGE	OUTER BOOM
2		5	4	BLUE	OUTER BOOM
3		6	2	BLACK/WHITE	LIFT
3		7	2	RED/WHITE	LIFT
4		8	0	BLUE/WHITE.	SWING
4		9	0	GREEN/WHITE	SWING
5		10	8	ORANGE/BLACK	COULTERS
5		11	8	BLUE/BLACK	COULTERS
6		12	10	RED/BLACK	BLADE
6		13	10	GREEN/BLACK	BLADE
		14		WHITE/BLACK	
		15			
		16			

WHITE - 12VDC TO HI/LO
GREEN - ⏚

SW1 SW2 SW3 SW4
SW5 SW6

#1621

1997

PLUG #5 COLUMN PLUG

PIN				
	1	RED	11	ST87 HOT SIDE
	2			
	3	RED	13	ST87 IGNITION SIDE
	4	BROWN	502	POWER FROM TURN SIGNAL STAT 502 TO 507
	5	WHITE	104	TO RELAY RA START RELAY
	14	BLACK	50	CLUTCH SWITCH TO PARK BRAKE SWITCH 3(2) NO.
	15	RED	0015	CLUTCH SWITCH TO BRAKE SMX SWITCH TO CLUTCH SV4 17
	18	BROWN	522	RIGHT TURN SIGNAL BROWN 54 522 TO 512
	20	YELLOW	523	LEFT TURN SIGNAL YELLOW 53 523 TO 513

GAUGE PANEL

PIN			
	1	OIL PRESSURE GAUGE	PURPLE 705 TO ORANGE/RED 14
	2	GROUND	BLACK 20 TO CAB GROUND
	3	INTERNAL LAMPS	BROWN 526
	4	IGNITION & BATTERY	RED 21 TO FUSE #7
	5	TEMPERATURE GAUGE	DARK GREEN 617 TO ORANGE 4
	6	FUEL GAUGE	BLUE 652 TO WHITE 58
	7		
	8		
	*9	WATER TEMPERATURE LIGHT	DARK BLUE 653 TO ORANGE/BLACK 9
	*10	OIL PRESSURE LIGHT	ORANGE 924 TO ORANGE/BLUE 19

*9 TO BZ6562 — BLUE 653 SENDER LIGHT — 1 12 VDC RED 21

*10 TO BZ6562 — ORANGE 924 LIGHT — 1 12 VDC RED 21